Digitized by the Internet Archive
in 2019

https://archive.org/details/morganilergeneal99iler

ALLEN COUNTY PUBLIC LIBRARY
3 1833 06489 5730

GC
929.2
IL3IL,
V.99

Morgan Iler Genealogical Research Collection

compiled by

Morgan Iler

Omaha, Nebraska

Vol. 99
Pringle family
KBase

Surnames: Abercrombie, Adams, Anderson, Baird, Blaney, Bull, Cowan, Fulljames, Hodgins, Ilard, Iler, Jellett, Kewin, Kingsmill, Low, Macdonell, Matthews, Musselman, Ogilvy, Patterson, Prevost, Pringle, Raney, Ritchie, Ruttan, Secord, Warren, Wright

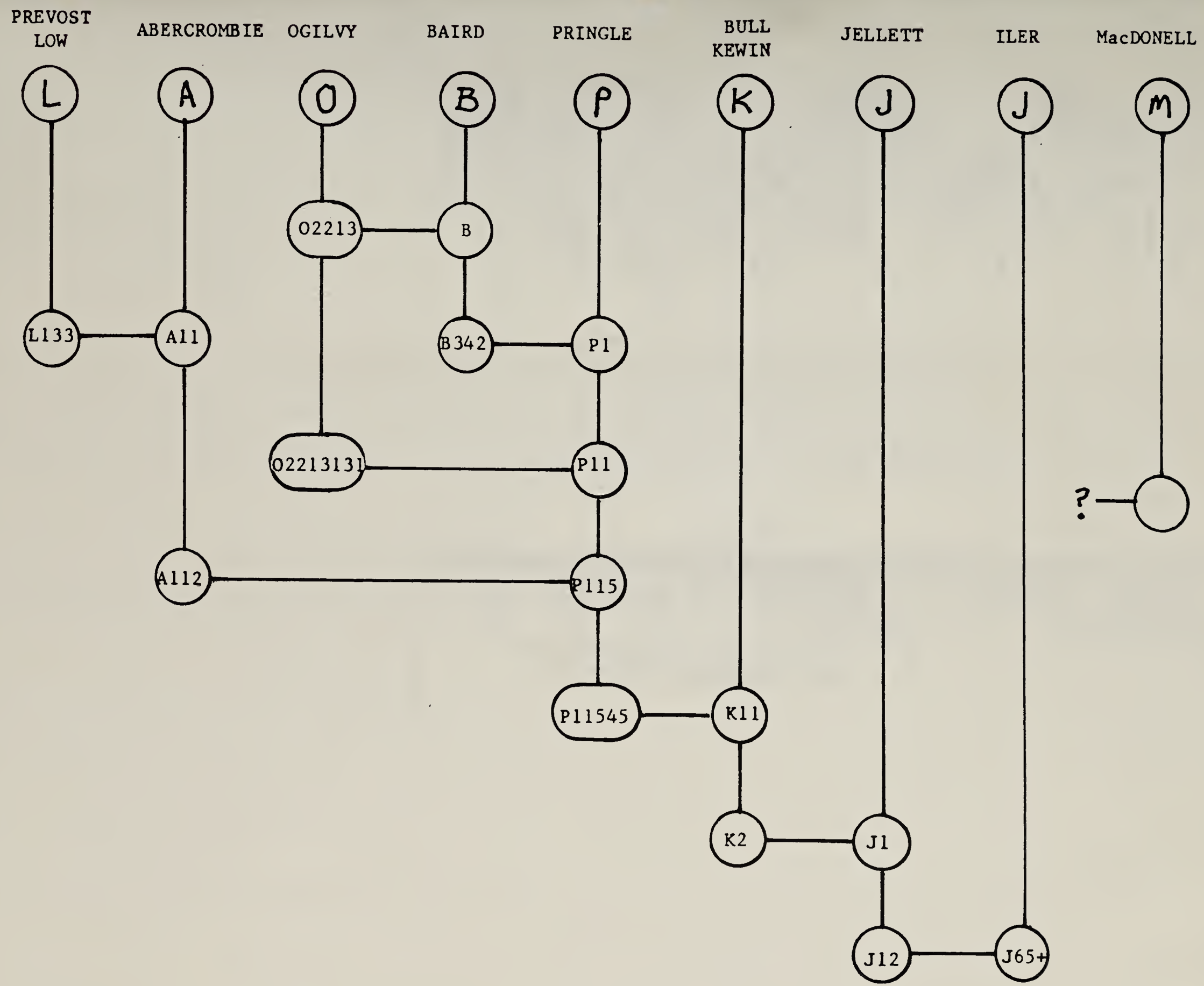
PREVOST
LOW
ABERCROMBIE
OGILVY
BAIRD
PRINGLE
BULL
KEWIN
JELLETT
ILER
MacDONELL
L
A
O
B
P
K
J
J
M
O2213
B
L133
A11
B342
P1
O2213131
P11
?
A112
P115
P11545
K11
K2
J1
J12
J65+

Key	Name	Born	Marr	Died	Bn	Res	Comments
Q	|==== PATTERSON, Richard	1844	xxxx	1919			
Q*	*PATTERSON, Matilda {WAGNER}	1847	xxxx	1927			
Q1	|==== O'HARA, Ella {PATTERSON}	1873	xxxx	1946			
Q1*	*O'HARA, William	1872	xxxx	1957			
	|==== O'HARA, ?	xxxx		xxxx	ONT		
	|==== O'HARA, ?	xxxx		xxxx	ONT		
	|==== O'HARA, ?	xxxx		xxxx	ONT		
Q14	|==== O'HARA, ?	xxxx		xxxx	ONT		
Q2	|==== SCOFIELD, Ruby {PATTERSON}	1885	xxxx	xxxx			
Q2*	*SCOFIELD, Bert	188x	xxxx	xxxx			
Q21	|==== PENNYQUICK, Elsie {SCOFIELD}	xxxx	xxxx	xxxx			
Q21*	*PENNYQUICK, George	xxxx	xxxx	xxxx			
Q22	|==== HARROP, Doris {SCOFIELD}	xxxx	xxxx	xxxx			
Q22*	*HARROP, Jack	xxxx	xxxx	xxxx			
Q23	|==== LUMMIS, Hilda {SCOFIELD}	xxxx	xxxx	xxxx			
Q23*	*LUMMIS, Ernie	xxxx	xxxx	xxxx			
Q24	|==== SCOFIELD, Jimmy	xxxx		xxxx			
Q25	|==== SCOFIELD, William	xxxx		xxxx			
Q26	|==== SCOFIELD, Richard	xxxx		xxxx			
Q3	|==== CHERPAW, Ada {PATTERSON}	1887	xxxx	1949			
Q3*	*CHERPAW, Ed	xxxx	xxxx	1944			
Q31	|==== SHAFFER, Louise {CHERPAW}	1899	xxxx				
Q31*	*SHAFFER, George	1899	xxxx				
Q311	|==== BLAKE, June {SHAFFER}	1921	xxxx				
Q311*	*BLAKE, Nev	1907	xxxx				
Q312	|==== WESTON, Betty {SHAFFER}	1920	xxxx				
Q312*	*WOODS, Amos	191e	193e			ON	
Q312+	*WESTON, Jack	1910	xxxx	1973			
Q3121	|==== WESTON, Jay	1937					
Q3122	|==== WESTON, Brad	1942					
Q3123	|==== WESTON, Jo-Ann	1949					
Q3124	|==== WESTON, Kevin	1953					
Q32	|==== CHERPAW, Marie	189e		189e	ON	ON	
Q33	|==== CHERPAW, Mel	xxxx		xxxx			
Q34	|==== CHERPAW, Floyd	1902		xxxx			
Q35	|==== CHERPAW, Dorothy	1905		19xx	ON	ON	
Q4	|==== PATTERSON, Herbert	xxxx	xxxx	xxxx			
Q4*	*PATTERSON, Norma {HENDERSON}	xxxx	xxxx	xxxx			
Q5	|==== BAULCH, Pearl C {PATTERSON}	1885	190x	1971	ONT	ON	
Q5*	*BAULCH, William Frederick	1884	190x	1946		ON	
Q51	|==== BAULCH, Gordon Stewart	1908	192x	1985	ONT	ONT	
Q51*	*BAULCH, Jean {GIBSON}	1904	192x	1991	ONT	ONT	
Q511	|==== ADDIS, Joyce {BAULCH}	1934	xxxx		ONT	ONT	
Q511*	*ADDIS, Leonard	1929	xxxx	1962			
Q5111	|==== ADDIS, Laurie	1962			ONT	ONT	
Q512	|==== BAULCH, Bill	1935	xxxx		ONT	ONT	
Q512*	*BAULCH, Dorothy {KNIGHT}	1946	xxxx		ONT	ONT	
Q5121	|==== BAULCH, Stuart	1973			ONT	ONT	
Q5122	|==== BAULCH, Helen	1975			ONT	ONT	
Q513	|==== BAULCH, Margaret	1938			ONT	ONT	
Q514	|==== WELLS, Anne {BAULCH}	1946	xxxx		ONT	ONT	
Q514*	*WELLS, Allen	1940	xxxx			ONT	
Q5141	|==== WELLS, David	1976			ONT	ONT	
Q5142	|==== WELLS, Beth	xxxx			ONT		
Q52	|==== SUGGITT, Madeleine St. Clair {BAULCH}	1910	193x		ONT	ONT	
	*SUGGITT, Joseph W.	1908	193x	1977	ONT		
	|==== SUGGITT, Harvey Joseph	1938	xxxx		ONT	ONT	
	*SUGGITT, Karen {FREW}	1928	xxxx		ONT	ONT	
Q5211	|==== SUGGITT, Jason	1971			ONT	ONT	
Q53	|==== ILER, Grace {BAULCH}	1912	1942		ONT	NE	
Q53*	*ILER, Morgan	1917	1942		ONT	NE	
Q54	|==== BAULCH, Willis (Bill) Richard	1914	193x	1967	ONT		
Q54*	*BAULCH, Betty {UNDERWOOD}	1915	193x		ONT	ONT	
Q55	|==== BAULCH, Clifford (Bud) F.	1928	xxxx	1984	ONT		
Q55*	*BAULCH, Jean {MORRIS}	1929	xxxx				
Q551	|==== BAULCH, Vickie	1960			ONT		
Q552	|==== BAULCH, Jeffrey	1964			ONT		
Q6	|==== PATTERSON, Minnie	1879		1898			
Q7	|==== MUSSELMAN, Libby {PATTERSON}	18xx	xxxx	19xx			
Q7*	*MUSSELMAN, William	18xx	xxxx	19xx			
Q71	|==== MUSSELMAN, Audrey	19xx					
Q72	|==== MUSSELMAN, Pearl	19xx					
Q73	|==== MUSSELMAN, Charles	19xx					
Q74	|==== MUSSELMAN, Liddia	19xx					

Total names= 74

Omaha, NE 68144-3106

J655

Morgan B Iler
2117 So 108th St
Omaha, NE 68144-3106

General Listing

Prepared By : Morgan B Iler
2117 So 108th Street
Omaha, NE 68144-3106

Date : 03 Mar 1994

ID_Number	Name_Last_Given_Names	Born_Date	Died_Date	Reference
1	ILER, Morgan Burritt	27 Jul 1917		J655
2	BAULCH, Grace Ellen	28 Dec 1912		J655*/Q53
20	PATTERSON, Richard	__ ___ 1844	08 Mar 1919	Q
21	WAGNER, Matilda	__ ___ 1847	14 Nov 1927	Q*
146	PATTERSON, Ella May	09 Sep 1873	20 Mar 1946	Q1
147	O'HARA, William	03 Feb 1872	30 Apr 1957	Q1*
148	PATTERSON, Ruby	29 Jun 1885	b __ ___ 1970	Q2
149	SCOFIELD, Bert	c __ ___ 1885	b __ ___ 1970	Q2*
150	SCOFIELD, Elsie	c __ ___ 1910		Q21
151	PENNYQUICK, George	c __ ___ 1910		Q21*
152	SCOFIELD, Doris	c __ ___ 1912		Q22
153	HARROP, Jack	c __ ___ 1912		Q22*
154	SCOFIELD, Hilda	c __ ___ 1915		Q23
155	LUMMIS, Ernie	c __ ___ 1915		Q23*
156	SCOFIELD, Jimmy	c __ ___ 1917		Q24
157	SCOFIELD, William	c __ ___ 1918		Q25
158	SCOFIELD, Richard	c __ ___ 1919		Q26
159	PATTERSON, Ada	01 Jul 1887	__ ___ 1949	Q3
160	CHERPAW, Ed	c __ ___ 1885	__ ___ 1944	Q3*
163	CHERPAW, Louise	02 Apr 1889	05 Oct 1981	Q31
164	SHAFFER, George	01 Oct 1899	__ ___ 1978	Q31*
165	SHAFFER, June	23 May 1919	11 Sep 1981	Q311
166	BLAKE, Nev	27 Oct 1907	__ Oct 1987	Q311*
167	SHAFFER, Betty	25 Feb 1920		Q312
1213	WOODS, Amos	c __ ___ 1910	__ ___ ___	Q312*
168	WESTON, Jack	03 Nov 1910	10 Nov 1973	Q312+
170	WESTON, John Bradley	31 Jan 1942		Q3121
169	WESTON, John Richard	28 Nov 1947		Q3122
171	WESTON, Jo-Ann Sue Louise	17 Mar 1949		Q3123
172	WESTON, Kevin Wayne	11 Dec 1953		Q3124
789	CHERPAW, Marie	c __ ___ 1895	c __ ___ 1896	Q32
162	CHERPAW, Melville	c __ ___ 1900		Q33
161	CHERPAW, Floyd	07 Dec 1902		Q34
788	CHERPAW, Dorothy	c __ ___ 1905		Q35
173	PATTERSON, Herbert	c __ ___ 1890	c __ ___ 1970	Q4
174	HENDERSON, Norma	c __ ___ 1890		Q4*
19	PATTERSON, Pearl Clifford	29 Jun 1885	10 Feb 1971	Q5
18	BAULCH, William Frederick	__ Feb 1884	03 Jan 1946	Q5*
88	BAULCH, (Rev) Gordon Stewart	14 Apr 1908	25 Sep 1985	Q51
112	GIBSON, Jean	29 Jul 1904	19 Jan 1991	Q51*
126	ADDIS, Joyce	21 Jun 1934		Q511
130	ADDIS, Leonard	12 Apr 1929	21 Jan 1962	Q511*
131	ADDIS, Laurie	01 Jan 1962		Q5111
127	BAULCH, Bill	29 Jul 1935		Q512
132	KNIGHT, Dorothy	11 Mar 1946		Q512*
133	BAULCH, Stuart	31 Jan 1973		Q5121
134	BAULCH, Helen	08 Apr 1975		Q5122
128	BAULCH, Margaret	31 Aug 1938		Q513
129	BAULCH, Anne	05 May 1946		Q514
135	WELLS, Allen	20 Apr 1940		Q514*
136	WELLS, David	30 Aug 1976		Q5141
137	WELLS, Beth	c __ ___ 1978		Q5142
87	BAULCH, Madeliene St Clair	14 Aug 1910		Q52
89	SUGGITT, Joseph Wilkinson	11 Nov 1908	27 Feb 1977	Q52*
90	SUGGITT, Harvey Joseph	05 Jun 1938		Q521
138	FREW, Karen	15 Oct 1928		Q521*
139	SUGGITT, Jason Robert	28 Jun 1971		Q5211
140	BAULCH, Willis Richard	01 Dec 1914	26 Mar 1967	Q54
141	UNDERWOOD, Betty	07 Apr 1915		Q54*
142	BAULCH, Clifford Frederick	12 Mar 1928	11 Nov 1984	Q55
143	MORRIS, Jean	05 Apr 1929		Q55*
144	BAULCH, Vickie	23 Dec 1960		Q551
145	BAULCH, Jeffrey	22 May 1964		Q552
175	PATTERSON, Minnie	c __ ___ 1879	b __ ___ 1925	Q6
176	PATTERSON, Libby	c __ ___ 1892		Q7
177	MUSSELMAN, William	c __ ___ 1890		Q7*
178	MUSSELMAN, Audrey	c __ ___ 1917		Q71
179	MUSSELMAN, Pearl	c __ ___ 1918		Q72
180	MUSSELMAN, Charles	c __ ___ 1920		Q73
181	MUSSELMAN, Liddia	c __ ___ 1922		Q74

E/REF		COMMENTS
	29/H5	29-I.440+ - 1st sheriff of Essex Co/mi
	29/H5	29-I.440+:do Capt John Gordon & Margar
	29/FM/D8L3	29-I.439+:b.1852?:d.1912?
	29/L3	29-I.439+:so Peter & Rachel (Scratch)
	29	29-I.438+
	29/FM	29-I.438+ Md#2 - Maude Elizabeth Sherm
	29/FM	29-I.438+
	FM	
	29/FM	29-I.438+
	FM	
H8	29/FM*	29-I.438+
H8	29/FM	29-I.438+
	29/FM	29-I.438+ - twin
	FM	DFC
	29/FM	29-I.438+ - twin
	FM	
	29/FM/D8H5	29-I.437+ - b. 1855?
	29	29-I.437+ -SO Theodore & Barbara Ann (
	29/H5	29-I.437+
	H5	
	29/D8/H5	29-I.437+ - b.4/8?
	29/D8/H5	29-I.437+
	29/H5	29-I.437+
	29/8	29-I.437+
	29/D8/H5	29-I.437+
	H5	
	29FMD8H5M3	29-I.440+
h	29/D8/H5M3	so Josiah and Lucretia (Morrish) Rumba
	29/D8/H5	29-I.435+:md.S Woodsley ON
	29/H5	29-I.435+:so Robert Gardner & Emily Al
	H5/M3	Flt surgeon for Enola Gay crew
	H5/M3	
k	H5	md.Quincy MA
k	H5	md.Quincy MA:do Michael Joseph and Nor
	H5	
	H5	
	H5	
	H5	md.Birmingham MI
	H5	md.Birmingham MI:so Roderick Vail Wile
illo	H5	
illo	H5	
	H5	
	H5	Veteririan reschr:so Robert & Evelyn S
	H5	
	H5	
	H5/M3	
	H5	
	H5	
	H5	
	H5/M3	do Raymond R and Paulyne (Crowley) Bas
	H5/M3	md.Detroit MI
	H5	Mechanic:so Lester Allen & Pearl (Hart
	H5	md.Toledo OH
	H5	md.Toledo OH
ga	H5	
	H5	
d	H5/M3	md.Toledo OH
d	H5/M3	
d	M3	
d	M3	
	H5/M3	Twin:md.Toledo
	H5	md.Toledo OH:do Byron Ross and Elizabe
	H5	md.Temperance MI
	H5	md.Temperance MI:so Kenneth Kruzynski
	M3	
	H5	Twin
	H5/M3	
	H5	do Francis John & Elizabeth (Romans) W
	H5/M3	md.Detroit MI
	H5/M3	md.Detroit MI:so Vincent DiFranco
	H5	
	H5/M3	md.Warren MI
	H5/M3	md.Warren MI
	H5/M3	md.Detroit MI
	H5/M3	md.Detroit MI:so George A Jacobson
ento	H5/M3	md.Richland WA
	H5/M3	md.Richland WA:so Charles D & Janet Ca
ento	H5/M3	md.Poulsbo WA
	H5/M3	md.Poulsbo WA
	H5	
	H5	
	H5/M3	md.West Chester OH
	H5/M3	md.West Chester OH:do Hugh Daugherty
	H5	md#1.Saginaw MI
	H5/M3	do Herbert A McDonald
	H5/M3	

F ROBT JAS PRINGLE (b. ABT1690) ——ROBERT PRINGLE (b. ABT1720) —
m. R J ? PRINGLE (b. ABT1690) | m. Jean GODDERAR (b. ABT1725)

GLE (1911-1987) —SALLY ELIZABETH PRINGLE (b. 1950) ——ROBERT JAMES BURNS (b. 1980)
9) | m. Robert A BURNS (b. ABT1950) ——JOHN TYLER BURNS (b. 1981)
——WILLIAM TOD PRINGLE (b. 1952)

E/REF		COMMENTS
	29/H5	29-I.440+ - 1st sheriff of Essex Co/mi
	29/H5	29-I.440+:do Capt John Gordon & Margar
	29/FM/D8L3	29-I.439+:b.1852?:d.1912?
	29/L3	29-I.439+:so Peter & Rachel (Scratch)
	29	29-I.438+
	29/FM	29-I.438+ Md#2 - Maude Elizabeth Sharm
	29/FM	29-I.438+
	FM	
	29/FM	29-I.438+
	FM	
H8	29/FM*	29-I.438+
H8	29/FM	29-I.438+
	29/FM	29-I.438+ - twin
	FM	DFC
	29/FM	29-I.438+ - twin
	FM	
	29/FM/D8H5	29-I.437+ - b. 1855?
	29	29-I.437+ -SO Theodore & Barbara Ann (
	29/H5	29-I.437+
	H5	
	29/D8/H5	29-I.437+ - b.4/8?
	29/D8/H5	29-I.437+
	29/H5	29-I.437+
	29/8	29-I.437+
	29/D8/H5	29-I.437+
	H5	
	29FMD8H5M3	29-I.440+
h	29/D8/H5M3	so Josiah and Lucretia (Morrish) Rumba
	29/D8/H5	29-I.435+:md.S Woodsley ON
	29/H5	29-I.435+:so Robert Gardner & Emily Al
	H5/M3	Flt surgeon for Enola Gay crew
	H5/M3	
k	H5	md.Quincy MA
k	H5	md.Quincy MA:do Michael Joseph and Nor
	H5	
	H5	
	H5	
	H5	md.Birmingham MI
	H5	md.Birmingham MI:so Roderick Vail Wile
illo	H5	
illo	H5	
	H5	
	H5	Veteririan reschr:so Robert & Evelyn S
	H5	
	H5	
	H5/M3	
	H5	
	H5	
	H5	
	H5/M3	do Raymond R and Paulyne (Crowley) Bas
	H5/M3	md.Detroit MI
	H5	Mechanic:so Lester Allen & Pearl (Hart
	H5	md.Toledo OH
	H5	md.Toledo OH
ga	H5	
	H5	
d	H5/M3	md.Toledo OH
d	H5/M3	
d	M3	
d	M3	
	H5/M3	Twin:md.Toledo
	H5	md.Toledo OH:do Byron Ross and Elizabe
	H5	md.Temperance MI
	H5	md.Temperance MI:so Kenneth Kruzynski
	M3	
	H5	Twin
	H5/M3	
	H5	do Francis John & Elizabeth (Romans) W
	H5/M3	md.Detroit MI
	H5/M3	md.Detroit MI:so Vincent DiFranco
	H5	
	H5/M3	md.Warren MI
	H5/M3	md.Warren MI
	H5/M3	md.Detroit MI
	H5/M3	md.Detroit MI:so George A Jacobson
ento	H5/M3	md.Richland WA
	H5/M3	md.Richland WA:so Charles D & Janet Ca
ento	H5/M3	md.Poulsbo WA
	H5/M3	md.Poulsbo WA
	H5	
	H5	
	H5/M3	md.West Chester OH
	H5/M3	md.West Chester OH:do Hugh Daugherty
	H5	md#1.Saginaw MI
	H5/M3	do Herbert A McDonald
	H5/M3	

- AUGUST JAS PRINGLE (b. ABT1690)
  - m. wo R J ? PRINGLE (b. ABT1690)
  - ROBERT PRINGLE (b. ABT1720)
    - m. Jean GOODERAR (b. ABT1725)
    - DUNBAR PRINGLE (b. ABT1750)
      - m. Margaret COWAN (b. ABT1750)
      - ROBERT ABERCROMBIE PRINGLE (b. 1775)
        - m. 1st wo R A ? PRINGLE
        - m. 2nd wo R A ? (b. ABT1780)
        - MARGARET PRINGLE (1777-1820)
          - m. Trophimus FULLJAMES (b. ABT1775)
            - THOMAS FULLJAMES (b. ABT1800)
            - ROBERT FULLJAMES (b. ABT1802)
            - JOHN PRINGLE FULLJAMES (b. ABT1804)
            - SO ROBERT M. FULLJAMES (ABT1806-BEF1892)
            - DO ROBERT M. FULLJAMES (b. ABT1808)
            - DO ROBERT M. FULLJAMES (b. ABT1810)
            - MARGARET FULLJAMES (ABT1812-BEF1892)
            - m. Capt ho M. BALFOUR (b. ABT1810)
        - GEORGE PRINGLE (b. 1778)
        - m. Wo Geo ? PRINGLE (b. ABT1778)
        - DUNBAR PRINGLE (1782-1805)
        - JAMES PRINGLE (b. 1784)
          - m. Anne Margaret ANDERSON (b. 1796)
          - JACOB FARRAND PRINGLE (1816-1901)
            - m. Isabella FRASER (b. 1825)
            - ANNE PRINGLE (b. ABT1840)
              - m. MO Arthur MOREN (ABT1840-1883)
              - m. Frederick O CORBETT (b. ABT1840)
              - SO ANNE ARTHUR MOREN (ABT1870-ABT1870)
              - ARTHUR FRASER S. MOREN (b. ABT1870)
              - m. Johanna Rubidge HAZEN (b. ABT1870)
            - MARGARET PRINGLE (b. ABT1840)
              - m. Francis J HALL (ABT1840-BEF1892)
              - GEORGE RUSSELL HALL (b. ABT1860)
              - FRANCIS JAMES HALL (b. ABT1860)
              - HARRY LESLIE HALL (b. ABT1870)
              - FARRAND HALL (b. ABT1870)
            - ISABELLA PRINGLE (b. ABT1850)
              - m. Thomas RITCHIE (b. ABT1850)
              - THOMAS FRASER RITCHIE (b. ABT1870)
              - JOHN WILLIAM P. RITCHIE (b. ABT1870)
              - LEWIS FARRAND RITCHIE (b. ABT1870)
              - MARY CHRISTINE RITCHIE (b. ABT1870)
              - BEATRICE L. RITCHIE (b. ABT1880)
              - EDITH ISABELLA RITCHIE (b. ABT1880)
              - ELLA ALMON RITCHIE (b. ABT1880)
            - JAMES FARRAND PRINGLE (b. ABT1850)
            - MO ALEXANDER F. PRINGLE (b. ABT1850)
            - m. Clara ALLEN (b. ABT1850)
            - ROBERT ABERCROMBIE PRINGLE (b. 1855)
              - m. Emma Ada VAN ARSDALE (b. ABT1855)
              - ROBERT HATFIELD PRINGLE (b. ABT1880)
              - JAMES FARRAND PRINGLE (1885-1949)
                - m. Mildred COOKE (1885-1959)
                - JAMES (TOD) FARRAND PRINGLE (1911-1987)
                - m. Helen Jane HICKS (b. 1923)
                - SALLY ELIZABETH PRINGLE (b. 1950)
                - m. Robert A BURNS (b. ABT1950)
                - ROBERT JAMES BURNS (b. 1980)
                - JOHN TYLER BURNS (b. 1981)
                - WILLIAM TOD PRINGLE (b. 1952)
                - JOHN ANDREW PRINGLE (b. 1954)
                - m. Cheryl Carpenter HAYNUK (b. 1964)
                - ROBERT ABERCROMBIE PRINGLE (b. 1962)
                - ROBERT ARTHUR PRINGLE (1913-1962)
                - m. Elizabeth (Bessie) A WEBB (b. 1911)
                - WILLIAM PRINGLE (b. 1941)
                - SIDNEY ISABELLA PRINGLE (1943-1991)
                - m. George Velmania MURRAY (1945-1991)
                - ROBERT MURRAY (b. 1971)
                - YVES MURRAY (b. 1974)
                - JAMES FARRAND PRINGLE (b. 1946)
                - WILLIAM ALFRED PRINGLE (1915-1965)
                - m. Doris DOHERTY (b. ABT1912)
                - CONSTANCE MILDRED PRINGLE (b. 1917)
                - m. John Lennox WRIGHT (b. 1911)
                - CONSTANCE MARY WRIGHT (b. 1942)
                - m. Michael ELLIS (b. ABT1940)
                - HEATHER CECILIA ELLIS (b. 1967)
                - THOMAS WRIGHT ELLIS (b. ABT1970)
                - CATHERINE MARY ELLIS (b. 1973)
                - HEATHER MILDRED WRIGHT (b. ABT1944)
                - m. Edward John GARDINER (1940-1987)
                - CONSTANCE GARDINER (b. 1969)
                - ELIZA GARDINER (b. 1971)
                - EMILY GARDINER (b. 1974)
                - WILLIAM ANDREW WRIGHT (b. 1946)
                - m. Ann VAN KESSEL (b. 1952)
                - ANDREW WRIGHT (b. 1985)
                - JAMES DE PENCIER WRIGHT (1948-1989)
                - m. Anne DOTY (b. ABT1950)
                - IAN JAMES WRIGHT (b. 1979)
                - NICHOLAS WRIGHT (b. 1982)
                - DAVID LOCKRIDGE WRIGHT (b. 1955)
                - JOHN ABERCROMBIE PRINGLE (b. 1923)
                - m. Barbara Elizabeth SLOAN (b. 1930)
                - BETH PRINGLE (b. 1954)
                - m. Donald MOOGINS (b. 1952)
                - SARAH ELIZABETH MOOGINS (b. 1982)
                - ARMANDA BARBARA MOOGINS (b. 1984)
                - CARELYN ANNE MOOGINS (b. 1986)
                - JILLIAN MARY MOOGINS (b. 1988)
                - FRASER PRINGLE (b. 1955)
                - m. Errica Anna BAPSCHENKOFF (b. 1962)
                - SUNNI ELIZABETH ANNE PRINGLE (b. 1985)
                - BOWMAN JOHN GERHART PRINGLE (b. 1987)
              - ISABEL EDNA EMILY PRINGLE (ABT1890-ABT1890)
            - GEORGE DROUHART PRINGLE (b. ABT1855)
            - MARY CHRISTINE PRINGLE (b. ABT1860)
              - m. John Athelmer AYLMER (b. ABT1860)
              - EDITH CHRISTINE AYLMER (b. ABT1880)
              - DOROTHEA AYLMER (b. ABT1880)
            - MO WILLIAM RODGER PRINGLE (b. ABT1860)
            - CHARLOTTE EDITH PRINGLE (ABT1860-ABT1880)
          - JAMES DUNBAR PRINGLE (1837-1911)
            - m. Mary FRASER (ABT1820-1854)
            - m. Phoebe Emma WILY (ABT1820-BEF1854)
            - MARGARET PRINGLE (b. 1824)
            - m. Henry Jones PUTTAN (b. ABT1824)
            - m. John WALLACE (b. ABT1825)
            - M.D. GEORGE PRINGLE (b. 1834)
              - m. Catherine S. FRENCH (b. ABT1835)
              - EDITH PRINGLE (ABT1860-1941)
                - m. R F Tate (b. ABT1860)
                - EDITH MAUD TATE (b. ABT1876)
                - LILLIAN GEORGINA H. TATE (b. ABT1877)
                - LUCIA ROBERTA B. TATE (b. ABT1878)
                - JOHN FREDERICK PERCY TATE (b. ABT1880)
              - LEILA GORDON PRINGLE (b. ABT1870)
              - ELSIE SMALL PRINGLE (ABT1871-1951)
              - HAROLD DUNBAR PRINGLE (b. ABT1873)
              - EDWIN (TED) CORYDON PRINGLE (1874-1953)
                - m. Emma Kathleen KEWIN (1889-1954)
                - JOHN EDWIN CORYDON PRINGLE (b. 1920)
                - m. Diana SCHWARTZ (b. 1921)
                - DAVID PRINGLE (b. 1949)
                - m. Saundra WALSH (b. 1958)
                - JANET ELIZABETH PRINGLE (b. 1980)
                - LAURA DAWN PRINGLE (b. 1983)
                - ROBERT GEORGE PRINGLE (b. 1986)
                - DUNCAN PRINGLE (b. 1952)
                - m. Nicole (Nicky) LEBEAU (b. 1954)
                - ADAM BRYANT PRINGLE (b. 1976)
                - JONATHAN MARL PRINGLE (b. 1980)
                - SUZANNE MARYSE PRINGLE (b. 1981)
                - ELIZABETH PRINGLE (b. 1922)
                - m. Allen SECORD (1920-1981)
                - JOHN SECORD (b. 1949)
                - m. Helen WILDERS (b. ABT1945)
                - ANNE SECORD (b. 1953)
                - m. Geoff ADAMS (b. 1955)
                - m. Douglas ALEXANDER (b. 1958)
                - ROBERT ADAMS (b. 1980)
                - MIRA ALEXANDER (b. 1990)
                - MARY SECORD (b. 1955)
                - m. Gary BLANEY (b. 1952)
                - DIANA BLANEY (b. 1985)
                - JANE BLANEY (b. 1987)
                - ELLIOTT BLANEY (b. 1990)
                - DIANA SECORD (1958-1976)
                - GWYNNETH PRINGLE (b. 1926)
                - m. Reg RANEY (b. 1916)
    - JOHN PRINGLE (1785-1853)
      - m. wo John P WALLACE (b. ABT1785)
      - MARY PRINGLE (b. ABT1805)
      - m. ho Mary P STARK (b. ABT1805)
      - JOHN PRINGLE (b. ABT1808)
      - GEORGE PRINGLE (b. ABT1810)
      - m. wo Geo ? PRINGLE (b. ABT1810)
      - ROBERT PRINGLE (b. ABT1812)
      - MARGARET PRINGLE (b. ABT1814)
      - m. Pev ho Ma P MANSON (b. ABT1814)
      - GRACE PRINGLE (b. ABT1815)
      - m. ho Gr P ROSE (b. ABT1815)
- JAMES PRINGLE (b. ABT1722)

04-02-1993 - 03:36:04

```
Key --------|-------2-------3---
            |
K           |===== BULL, George
K*          |    * BULL, Emma {S
            |
K1          |===== JELLE
K1*         |    * JELLE
            |
K11         |===
K11         |===
K12         |===
K13         |===
K14         |===
K15         |===
K16         |===
K17*        |
K17*        |
K18         |===
K18*        |
K185
K185*
K1851
K1851*
K18511
K18511*
K185111
K18512
K18513
K18514
K18515
K1852
K1852*
K1852+
K18521
K18522
K1853
K2          |===== KEWI
K2*         |    * KEWI
            |
K21         |===
K22         |===
K22*        |
K221
K221*
K2211
K2211*
K22111
K22112
K22113
K2212
K2212*
K22121
K22122
K22123
K222
K222*
K2221
K2221*
K2222
K2222*
K2222+
K22221
K22222
K2223
Key --------1-------2-------3-
```

Mo

JEL

JEL

ILE

dw1

PR1

PRINTED IN U.S.A.

FORM 1411 ½ G8

Key	Name	Born-Died-Md#1	Born	Res	Co/Loc	Source	Comments	Street Address/or misc	Location
									Stirling
K	===== 8ULL, George E	1820-1xxx-184e	ON⧗	ON	Hasting		b.181S? b.USA?		Stirling
K⧗	⧗ 8ULL, Emma (St)	1830-1xxx-184e	ON	ON	Hasting				
									Belleville
K1	===== JELLETT, Sara S M (8ULL)	18S0-1900-1870	ON	ON	Hasting		J02S⧗		Belleville
K1⧗	⧗ JELLETT, Morgan O	1837-1881-1863	ON	ON	Hasting				
K11	===== JELLETT, Sara Susan Margaret (8ULL)	18S0-1900-1870	ON				K1		
K11	===== JELLETT(⧗), Kathleen	186e-18xx-	ON	ON	Hasting				Belleville
K12	===== JELLETT(⧗), Morgan	1866-1867-	ON	ON	Hasting				Belleville
K13	===== JELLETT(⧗), Ernest	1868-18xx-	ON	ON	Hasting		Twin		Belleville
K14	===== JELLETT(⧗), Charles	1868-18xx-	ON	ON	Hasting		Twin		Belleville
K1S	===== JELLETT(+), 8ertie Cecil (Timothy)	1871-1878-	ON	ON	Hasting				Belleville
K16	===== JELLETT(+), Timothy	187e-18xx-	ON	ON	Hasting				
K17⧗	⧗ JELLETT(+), Morgan	1877-19S3-1911	ONT	ON			No children		
K17⧗	⧗ JELLETT, 8eatrice Mary (8ICKFORO)	187x-19Sx-xxxx	ONT	ON			No children		
K18	===== ILER(+), Sophia Marguerite (JELLETT)	1882-1968-1914	ONT				J6S+ (J8ASE)		
K18⧗	⧗ ILER, 8urritt	18S1-1929-1877	ON				J6S (J8ASE)		
K18S	===== ILER(+), Morgan 8urritt	1917- -1942	ONT	NE	68144	⧗		2117 So 108th St	Omaha
K18S⧗	⧗ ILER, Grace Ellen (8AULCH)	1912- -1942	ONT	NE	68144		MS3	2117 So 108th St	Omaha
K18S1	===== ROSE, Marguerite Ellen (ILER)	194S- -1966	ONT	WA	99163			SE S40 Highland Way	Pullman
K1851⧗	⧗ ROSE, Jerman Walter III	1944- -1966	NY	WA	99163			SE S40 Highland Way	Pullman
K18511	===== ROSE, Robert Morgan	1966- -1990	NE	NE	69101			91S No 8ryan	North Platte
K18S11⧗	⧗ ROSE, Susan Jane (STOUT)	1967- -1990	NE	NE	69101			91S No 8ryan	North Platte
K18S111	===== ROSE, Morgan James	1992- -	NE	NE					North Platte
K18S12	===== ROSE, Kathryn Grace	1969- -	KS	NE	68xxx				Kearney
K18S13	===== ROSE, Molly Anne	1977- -	NE	WA	99163			SE S40 Highland Way	Pullman
K18S14	===== ROSE, Oaniel James	1979- -	NE	WA	99163			SE S40 Highland Way	Pullman
K18S1S	===== ROSE, Mary Elaine	1981- -	NE	WA	99163			SE S40 Highland Way	Pullman
K18S2	===== ILER, Douglas Morgan	1946- -1968	ONT	MN	SS342		612-933-S154	1S1 8th Ave South	Hopkins
K18S2⧗	⧗ ILER, Karen E (NELSEN)	1946- -1968	NE	NE	68124	72		3604 So 107th St	Omaha
K18S2+	+ ILER, Gail (ETHIER)	1948- -1981	WI	MN	SS342		612-933-51S4	1S1 8th Ave South	Hopkins
K18S21	===== ILER(⧗), Kari Lynn	1971- -	IA	NE	68124			3604 So 107th St	Omaha
K18S22	===== ILER(⧗), Jennifer Elaine	1974- -	MN	NE	68124			3604 So 107th St	Omaha
K18S3	===== ILER, Grace Elaine	19S6- -	ONT	MO	64114			7717 Madison	Kansas City
K2	===== KEWIN, Emma St John's (8ULL)	18S4-192S-187e	ON						
K2⧗	⧗ KEWIN, Edwin	1836-1918-187e							
K21	===== KEWIN, Muriel Elaine	1887-1896-							
K22	===== PRINGLE, Emma Kathleen (KEWIN)	1889-19S4-1919					P11S4S⧗		
K22⧗	⧗ PRINGLE, Edwin (Ted) Corydon	1874-19S3-1919					P11S4S		
K221	===== PRINGLE, John Edwin Coryden	1920- -1947	ONT	ONT	M9N 2A4		Separted 1970	2460 Weston Rd - Apt 2707	Toronto
K221⧗	⧗ PRINGLE, Diana (SCHWARTZ)	1921- -1947	ONT				Separted 1970. DD Geo 8ryant & Constance (Henderson) Schwartz		
K2211	===== PRINGLE, David	1949- -1979	ONT						
K2211⧗	⧗ PRINGLE, Saundra (WALSH)	19S8- -1979					DD Johne & June (Overbay) Walsh		
K22111	===== PRINGLE, Janet Elizabeth	1980- -							
K22112	===== PRINGLE, Laura Dawn	1983- -							
K22113	===== PRINGLE, Robert George	1986- -							
K2212	===== PRINGLE, Duncan	19S2- -1974	ONT						
K2212⧗	⧗ PRINGLE, Nicole (Nicky) (LE8EAU)	19S4- -1974	ONT						
K22121	===== PRINGLE, Adam 8ryant	1976- -							
K22122	===== PRINGLE, Jonathan Marc	1980- -							
K22123	===== PRINGLE, Suzanne Maryse	1981- -							
K222	===== SECORD, Elizabeth (PRINGLE)	1922- -1947	ONT	ONT	K2A 2TS			6SS Mansfield Ave	Ottawa
K222⧗	⧗ SECORD, Allen	1920-1981-1947	ONT				Died of cancer. SD Herbert Secord		
K2221	===== SECORD, John	1949- -1981	ONT				Dvc'd 11/13/88		
K2221⧗	⧗ SECORD, Helen (WILDERS)	194x- -1981	ONT				Dvc'd 11/13/88		
K2222	===== ALEXANDER, Anne (ADAMS) (SECORD)	1953- -1978	ONT				Dvc'd m#1 '8S		
K2222⧗	⧗ ADAMS, Geofl	19SS- -1978	ONT				Dvc'd 198S		
K2222+	+ ALEXANDER, Douglas	19S8- -1987	ONT						
K22221	===== ADAMS(⧗), Robert	1980- -	ONT						
K22222	===== ALEXANDER(⧗), Myra	1990- -	ONT						
K2223	===== 8LANEY, Mary (SECORD)	19SS- -197S	ONT						

1 2 3 4 5 6 7 8 9 10 11 12 13 14 15 16 17 18 19 20 21 22 23 24 25 26 27 28 29 30 31 32 33 34 35 36 37 38 39 40 41 42 43 44 45 46 47 48 49 50 51 52 53 54 55 56 57

04-02-1993 - 03:36:16

```
Key --------1-------2-------3---
K2223*

K22231
K22232
K22233

K2224

K223
K223*

K23
K23*

K231
K231*

K2311
K2311*
K2312
K2312*

K232
K232*
K233
K233*

K2331
K2331*

K23311
K23312

K2332

K3
K4

Key --------1-------2-------3
Total names= 85
```

PRINTED IN U.S.A.
FORM 1411 ½ G4

1 2 3 4 5 6 7 8 9 10 11 12 13 14 15 16 17 18 19 20 21 22 23 24 25 26 27 28 29 30 31 32 33 34 35 36 37 38 39 40 41 42 43 44 45 46 47 48 49 50 51 52 53 54 55 56 57

04-02-1993 - 03:36:16 FAMILY "TREE" (Descendancy) LISTING ===== = Descendant ± = 1st Spouse + = 2nd Spouse - = 3rd Spouse / = Addl Spouse(s)

Key	Name	Born	Died	Md#1	Br	Res	Co/Loc	Source	Comments	Street Address/or misc	Location
K2223±	± 8LANEY, Gary	1952-	-1975			ONT					
K22231	===== 8LANEY, Diana	1985-	-			ONT					
K22232	===== 8LANEY, Jane	1987-	-			ONT					
K22233	===== 8LANEY, Elliott	1990-	-			ONT					
K2224	===== SECORD, Diana	1958-	1976-			ONT			Severely handicapped		
K223	===== RANEY, Gwynneth (PRINGLE)	1926-	-1968	ONT	ONT	N1A	2W6			MA SQUA 8E - RR #7	Dunnville
K223±	± RANEY, Reg	1916-	-19xx	ONT	ONT	N1A	2W6			MA SQUA 8E - RR #7	Dunnville
K23	===== KEWIN, George	1893-	19xx-	19xx		ONT					
K23±	± KEWIN, Dorothy Perryn (DUNSTAN)	1885-	1966-	19xx		ONT			DO Kenneth Jewell & Alice (Pearce) Dunstan		
K231	===== MATTHEWS, Gwynneth Joan (KEWIN)	1926-	-1954	ON	ONT					1846 Stonepath Cres	Cooksville
K231±	± MATTHEWS, James Nelles	192x-	-1954	ON	ONT				SO James Gerrie and Bonnie Madeleine (?) Matthews	1846 Stonepath Cres	Cooksville
K2311	===== MATTHEWS, James Edwin	1959-	-1986	ON	ON	Simcoe					
K2311±	± MATTHEWS, Heidi (?)	195x-	-1986	ONT	ON	Simcoe					
K2312	===== GOERTZEN, Judith Anne (MATTHEWS)	1963-	-1989	ON	ON	Simcoe					
K2312±	± GOERTZEN, Randall	196x-	-1989	ONT	ON	Simcoe					
K232	===== KEWIN, Kenneth	1927-	-194x	ONT	ONT						Burlington
K232±	± KEWIN, Maxine (GRANT)	192x-	-194x	ONT	ONT						Burlington
K233	===== WARREN, Daphne (KEWIN)	1935-	-195x	ONT					Ovc'd		
K233±	± WARREN, ?	193x-	-195x						Ovc'd		
K2331	===== WARREN, Kenneth	196x-	-198x	ONT							
K2331±	± WARREN, Sally (MCCANN)	196x-	-198x	ONT							
K23311	===== WARREN, Jeffrey	1984-	-			ONT					
K23312	===== WARREN, Kyle	1989-	-			ONT					
K2332	===== WARREN, Stephen	195x-	-			ONT			Unmarried		
K3	===== BULL, Elisa	1857-	1xxx-			ON					
K4	===== BULL, Solomon	1860-	1xxx-			ON					

Key --------1-------2-------3-------4-------5-------6-------7-------8-------9-------A-------- Born-Died-Md#1--Br-Res-Co/Loc--Source------Comments---------- Street Address/or misc----Location-----

Total names= 85

1 2 3 4 5 6 7 8 9 10 11 12 13 14 15 16 17 18 19 20 21 22 23 24 25 26 27 28 29 30 31 32 33 34 35 36 37 38 39 40 41 42 43 44 45 46 47 48 49 50 51 52 53 54 55 56 57

DUNBAR PRINGLE

ROBERT ABERCROMBIE
B 1775

James Pringle P115
B 1784
M 1814
Anne Margaret Anderson
B 1796-1870

FROM GENEALOGY OF
JACOB FARRAND PRINGLE

Jacob Farrand P1151
1816
M 1844
Isabella Fraser
B ?

George P1154
B. ? 1834
M 1860
Catherine Sophie
French

P11516 + 4 more

1 Edith
2 Leila
3 Elsie
4 Harold
P11545 Edwin C

6th ROBERT ABERCROMBIE
B ?
M ?
EMMA VAN ARSDALE

P11561 B ? P115162 P115163

JAMES FARRAND
B 1876
M.
MILDRED ?
D 1959

ROBERT HATFIELD

ISABEL EDNA

Beatrice KINGSMILL & UNMARRIED
John
Bill (NC
Tony (AG)
Peter
MAUDE GATES
Georgina STRANGE
Elizabeth
Barbara
Frederick - ?

B. 1874-D 1953
M. 1919
EMMA Kathleen Kiewin
B 1889 - D 1954

JOHN EC

ELIZABETH
JOHN ELIZ. GWYN
DIANA JOHN
DAVID ANN
DUNCAN MARY
DIONE

GWYNNETH
REC RANGY
NO CHILDREN

WM
Died in 1970's

JAMES F
Died
C. 1987
M ?
Wife Jane

CONSTANCE
Wright
5 children

JOHN

DAVID
1949
M 1979
SAUNDRA
1958
Janet
Laura
ROBERT

DUNCAN
1952
M 1974
NICOLE
1954
Adam
JONATHAN
SUZANNE

RANEY - PRINGLE

As of 02-28-1991 - 21:31:11 P115453

FAMILY GROUP RECORD

****

ISSUE: PRINGLE Gwynneth

Born: 02/27/1926 Place CAN - ONT - .....

Chr: Place .....

Marr.: 05/31/1968 Place .....

Died: / / Place - - .....

Bur.: Place .....

Issue's Father ..... Issue's Mother .....

Comments:

SPOUSE: RANEY Reg P115453*

Born: xx/xx/1916 Place CAN - ONT - ? .....

Chr: Place .....

Died: / / Place - - .....

Bur.: Place .....

Spouse's Father ..... Spouse's Mother .....

Comments:

****

M/ ---------- CHILDREN ---------- When Born ------- Where Born ------- Date 1st Marriage Died

F Given Name(s) Surname Mo Dy Year To whom (line 2)

Comments (if any) Children Comments (if any) Spouse

****

PRINCIPAL DATA SOURCE(s): 43

BLANEY - SECORD

As of 02-28-1991 - 21:30:34 P1154523

FAMILY GROUP RECORD

****

ISSUE: SECORD Mary

Born: 06/02/1955 Place CAN - ONT - .....

Chr: Place .....

Marr.: xx/xx/1975 Place .....

Died: / / Place - - .....

Bur.: Place .....

Issue's Father ..... Issue's Mother .....

Comments:

SPOUSE: BLANEY Gary P1154523*

Born: 12/15/1952 Place CAN - ONT - .....

Chr: Place .....

Died: / / Place - - .....

Bur.: Place .....

Spouse's Father ..... Spouse's Mother .....

Comments:

****

M/ F	CHILDREN Given Name(s) / Comments (if any) Children	Surname	When Born Mo Dy Year	Where Born	Date 1st Marriage To whom (line 2) / Comments (if any) Spouse	Died	
F	Diana	BLANEY	xx/xx/1985	CAN - ONT	/ /	/ / -	1
F	Jane	BLANEY	xx/xx/1987	CAN - ONT	/ /	/ / -	2
M	Elliott	BLANEY	xx/xx/1990	CAN - ONT	/ /	/ / -	3

****

PRINCIPAL DATA SOURCE(s): 43

ADAMS/ALEXANDER - SECORD

As of 02-28-1991 - 21:29:56 P1154522

FAMILY GROUP RECORD

****

ISSUE: SECORD Anne (ADAMS)
Born: 01/02/1953 Place CAN - ONT - .....
Chr: Place .....
Marr.: 08/04/1978 Place .....
Died: / / Place - - .....
Bur.: Place .....
Issue's Father ..... Issue's Mother .....
Comments: Dvc'd m#1 '85 Married more than once (see below)

SPOUSE: ADAMS Geofl P1154522*
Born: 06/19/1955 Place CAN - ONT - .....
Chr: Place .....
Died: / / Place - - .....
Bur.: Place .....
Spouse's Father ..... Spouse's Mother .....
Comments: Dvc'd 1985

****

M/ F	CHILDREN Given Name(s)	Surname	When Born Mo Dy Year	Where Born	Date 1st Marriage To whom (line 2)	Died	
	Comments (if any) Children			Comments (if any) Spouse			
M	*Robert	ADAMS	xx/xx/1980	CAN - ONT	/ /	/ / -	1
F	*Myra	ALEXANDER	xx/xx/1990	CAN - ONT	/ /	/ / -	2

****

PRINCIPAL DATA SOURCE(s): 43

ADD'L MARRIAGE(s):
P1154522+ 43 ALEXANDER Douglas

SECORD - PRINGLE

As of 02-28-1991 - 21:27:29 P115452

FAMILY GROUP RECORD

****

ISSUE: PRINGLE Elizabeth

Born: 02/05/1922 Place CAN - ONT - ? .....

Chr: Place .....

Marr.: 05/17/1947 Place .....

Died: / / Place - - .....

Bur.: Place .....

Issue's Father ..... Issue's Mother .....

Comments:

SPOUSE: SECORD Allen P115452*

Born: 04/12/1920 Place CAN - ONT - .....

Chr: Place .....

Died: 02/20/1981 Place CAN - ONT - Ottawa .....

Bur.: Place .....

Spouse's Father ..... Spouse's Mother .....

Comments: Died of cancer. SO Herbert Secord

****

M/ F	CHILDREN Given Name(s) / Comments (if any) Children	Surname	When Born Mo Dy Year	Where Born	Date 1st Marriage To whom (line 2) / Comments (if any) Spouse	Died	
M	John Dvc'd 11/13/88	SECORD	07/10/1949	CAN - ONT	02/21/1981 Helen WILDERS Dvc'd 11/13/88	/ /	- 1
F	Anne (ADAMS) Dvc'd m#1 '85	SECORD	01/02/1953	CAN - ONT	08/04/1978 Geofl ADAMS Dvc'd 1985	/ /	- 2
F	Mary	SECORD	06/02/1955	CAN - ONT	xx/xx/1975 Gary BLANEY	/ /	- 3
F	Diana Severely handicapped	SECORD	xx/xx/1958	CAN - ONT	/ /	xx/xx/1976	- 4

****

PRINCIPAL DATA SOURCE(s): 43

PRINGLE - LEBEAU

As of 02-28-1991 - 21:28:52 P1154512

FAMILY GROUP RECORD

****

ISSUE: PRINGLE Duncan

Born: 03/23/1952 Place CAN - ONT - .....

Chr: Place .....

Marr.: 12/28/1974 Place .....

Died: / / Place - - .....

Bur.: Place .....

Issue's Father ..... Issue's Mother .....

Comments:

SPOUSE: LEBEAU Nicole (Nicky) P1154512*

Born: xx/xx/1954 Place CAN - ONT - .....

Chr: Place .....

Died: / / Place - - .....

Bur.: Place .....

Spouse's Father ..... Spouse's Mother .....

Comments:

****

M/ F	CHILDREN Given Name(s) / Comments (if any) Children	Surname	When Born Mo Dy Year	Where Born	Date 1st Marriage To whom (line 2) / Comments (if any) Spouse	Died	
M	Adam Bryant	PRINGLE	03/10/1976	-	/ /	/ / -	1
M	Jonathan Marc	PRINGLE	03/24/1980	-	/ /	/ / -	2
F	Suzanne Maryse	PRINGLE	04/05/1981	-	/ /	/ / -	3

****

PRINCIPAL DATA SOURCE(s): 43

PRINGLE - WALSH

As of 02-28-1991 - 21:28:21 P1154511

FAMILY GROUP RECORD

****

ISSUE: PRINGLE David

Born: 05/02/1949 Place CAN - ONT - .....

Chr: Place .....

Marr.: xx/xx/1979 Place .....

Died: / / Place - - .....

Bur.: Place .....

Issue's Father ..... Issue's Mother .....

Comments:

SPOUSE: WALSH Saundra P1154511*

Born: xx/xx/1958 Place - - .....

Chr: Place .....

Died: / / Place - - .....

Bur.: Place .....

Spouse's Father ..... Spouse's Mother .....

Comments: DO Johne & June (Overbay) Walsh

****

M/ F	CHILDREN Given Name(s)	Surname	When Born Mo Dy Year	Where Born	Date 1st Marriage To whom (line 2)	Died	
	Comments (if any) Children			Comments (if any) Spouse			
F	Janet Elizabeth	PRINGLE	06/25/1980	-	/ /	/ / -	1
M	Laura Dawn	PRINGLE	07/17/1983	-	/ /	/ / -	2
M	Robert George	PRINGLE	03/01/1986	-	/ /	/ / -	3

****

PRINCIPAL DATA SOURCE(s): 43

PRINGLE - SCHWARTZ

As of 02-28-1991 - 21:26:42 P115451

FAMILY GROUP RECORD

****

ISSUE: PRINGLE John Edwin Coryden

Born: 04/29/1920 Place CAN - ONT - .....

Chr: Place .....

Marr.: 09/04/1947 Place .....

Died: / / Place - - .....

Bur.: Place .....

Issue's Father ..... Issue's Mother .....

Comments: Separted 1970

SPOUSE: SCHWARTZ Diana P115451*

Born: 05/23/1921 Place CAN - ONT - .....

Chr: Place .....

Died: / / Place - - .....

Bur.: Place .....

Spouse's Father ..... Spouse's Mother .....

Comments: Separted 1970. DO Geo Bryant & Constance (Henderson) Schwartz

****

M/ F	CHILDREN Given Name(s)	Surname	When Born Mo Dy Year	Where Born	Date 1st Marriage To whom (line 2)		Died	
	Comments (if any) Children				Comments (if any) Spouse			
M	David	PRINGLE	05/02/1949	CAN - ONT	xx/xx/1979 Saundra	WALSH	/ /	- 1
					DO Johne & June (Overbay) Walsh			
M	Duncan	PRINGLE	03/23/1952	CAN - ONT	12/28/1974 Nicole (Nicky)	LEBEAU	/ /	- 2

****

PRINCIPAL DATA SOURCE(s): 43

PRINGLE - KEWIN

As of 02-28-1991 - 21:25:13 P11545

FAMILY GROUP RECORD

****

ISSUE: PRINGLE Edwin (Ted) Corydon

Born: 12/29/1874 Place - - .....

Chr: Place .....

Marr.: 04/06/1919 Place .....

Died: 01/15/1953 Place CAN - ONT - Toronto .....

Bur.: Place .....

Issue's Father ..... Issue's Mother .....

Comments: K11*

SPOUSE: KEWIN Emma Kathleen P11545*

Born: 01/17/1889 Place - - .....

Chr: Place .....

Died: 11/27/1954 Place CAN - ONT - Toronto .....

Bur.: Place .....

Spouse's Father ..... Spouse's Mother .....

Comments: K11

****

M/ F	CHILDREN Given Name(s)	Surname	When Born Mo Dy Year	Where Born	Date 1st Marriage To whom (line 2)	Died	
	Comments (if any) Children			Comments (if any) Spouse			
M	John Edwin Coryden	PRINGLE	04/29/1920	CAN - ONT	09/04/1947 Diana SCHWARTZ	/ /	- 1
	Separted 1970			Separted 1970. DO Geo Bryant & Constance (Henderson) Schwartz			
F	Elizabeth	PRINGLE	02/05/1922 ?	CAN - ONT	05/17/1947 Allen SECORD	/ /	- 2
				Died of cancer. SO Herbert Secord			
F	Gwynneth	PRINGLE	02/27/1926	CAN - ONT	05/31/1968 Reg RANEY	/ /	- 3

****

PRINCIPAL DATA SOURCE(s): 43

WARREN - MCCANN

As of 02-28-1991 - 21:22:30 K1231

FAMILY GROUP RECORD

****

ISSUE: WARREN Kenneth

Born: xx/xx/196x Place CAN - ONT - ? .....

Chr: Place .....

Marr.: xx/xx/198x Place .....

Died: / / Place - - .....

Bur.: Place .....

Issue's Father ..... Issue's Mother .....

Comments:

SPOUSE: MCCANN Sally K1231*

Born: xx/xx/196x Place CAN - ONT - ? .....

Chr: Place .....

Died: / / Place - - .....

Bur.: Place .....

Spouse's Father ..... Spouse's Mother .....

Comments:

****

M/ F	CHILDREN Given Name(s)	Surname	When Born Mo Dy Year	Where Born	Date 1st Marriage To whom (line 2)	Died	
	Comments (if any) Children				Comments (if any) Spouse		
M	Jeffrey	WARREN	xx/xx/1984 ?	CAN - ONT	/ /	/ /	- 1
M	Kyle	WARREN	xx/xx/1989 ?	CAN - ONT	/ /	/ /	- 2

****

PRINCIPAL DATA SOURCE(s): 43

WARREN - KEWIN

As of 02-28-1991 - 21:21:55 K123

FAMILY GROUP RECORD

****

ISSUE: KEWIN Daphne

Born: 04/14/1935 Place CAN - ONT - ? .....

Chr: Place .....

Marr.: xx/xx/195x Place .....

Died: / / Place - - .....

Bur.: Place .....

Issue's Father ..... Issue's Mother .....

Comments: Dvc'd

SPOUSE: WARREN ? K123*

Born: xx/xx/193x Place - - .....

Chr: Place .....

Died: / / Place - - .....

Bur.: Place .....

Spouse's Father ..... Spouse's Mother .....

Comments: Dvc'd

****

M/ F	CHILDREN Given Name(s)	Surname	When Born Mo Dy Year	Where Born	Date 1st Marriage To whom (line 2)	Died
	Comments (if any) Children			Comments (if any) Spouse		
M	Kenneth	WARREN	xx/xx/196x ?	CAN - ONT	xx/xx/198x Sally MCCANN	/ / - 1
M	Stephen Unmarried	WARREN	xx/xx/195x ?	CAN - ONT	/ /	/ / - 2

****

PRINCIPAL DATA SOURCE(s): 43

MATTHEWS - KEWIN

As of 02-28-1991 - 21:21:26 K121

FAMILY GROUP RECORD

****

ISSUE: KEWIN Gwynneth

Born: 01/11/1926 Place CAN - ONT - ? .....

Chr: Place .....

Marr.: xx/xx/194x Place .....

Died: / / Place - - .....

Bur.: Place .....

Issue's Father ..... Issue's Mother .....

Comments:

SPOUSE: MATTHEWS James K121*

Born: xx/xx/192x Place CAN - ONT - ? .....

Chr: Place .....

Died: / / Place - - .....

Bur.: Place .....

Spouse's Father ..... Spouse's Mother .....

Comments:

****

M/ F	CHILDREN Given Name(s) / Comments (if any) Children	Surname	When Born Mo Dy Year	Where Born / Comments (if any) Spouse	Date 1st Marriage / To whom (line 2)	Died	
M	James Edwin	MATTHEWS	xx/xx/194x ?	CAN - ONT	xx/xx/197x Heidi ?	/ /	- 1
F	Judith Anne	MATTHEWS	xx/xx/195x ?	CAN - ONT	xx/xx/1989 Randall GOERTZEN	/ /	- 2

****

PRINCIPAL DATA SOURCE(s): 43

KEWIN - DUNSTAN

As of 02-28-1991 - 21:19:59 K12

FAMILY GROUP RECORD

****

ISSUE: KEWIN George

Born: 01/22/1893 Place CAN - ONT - ? .....

Chr: Place .....

Marr.: xx/xx/19xx Place .....

Died: xx/xx/19xx Place CAN - ONT - Toronto .....

Bur.: Place .....

Issue's Father ..... Issue's Mother .....

Comments:

SPOUSE: DUNSTAN Dorothy K12*

Born: 09/11/1885 Place CAN - ONT - ? .....

Chr: Place .....

Died: 05/xx/1966 Place CAN - ONT - Toronto .....

Bur.: Place .....

Spouse's Father ..... Spouse's Mother .....

Comments: DO Kenneth Jewell & Alice (Pearce) Dunstan

****

M/ F	CHILDREN Given Name(s)	Surname	When Born Mo Dy Year	Where Born	Date 1st Marriage To whom (line 2)		Died	
	Comments (if any) Children			Comments (if any) Spouse				
F	Gwynneth	KEWIN	01/11/1926 ?	CAN - ONT	xx/xx/194x James	MATTHEWS	/ /	- 1
M	Kenneth	KEWIN	04/16/1927 ?	CAN - ONT	xx/xx/194x Maxine	GRANT	/ /	- 2
f	Daphne	KEWIN	04/14/1935 ?	CAN - ONT	xx/xx/195x ?	WARREN	/ /	- 3
	Dvc'd			Dvc'd				

****

PRINCIPAL DATA SOURCE(s): 43

KEWIN - BULL

As of 02-28-1991 - 21:18:33 K1

FAMILY GROUP RECORD

****

ISSUE: BULL Emma St John's

Born: 11/16/1854 Place - - ? .....

Chr: Place .....

Marr.: xx/xx/18xx Place .....

Died: 03/07/1925 Place - - ? .....

Bur.: Place .....

Issue's Father ..... Issue's Mother .....

Comments:

SPOUSE: KEWIN Edwin K1*

Born: 08/26/1836 Place - - ? .....

Chr: Place .....

Died: 10/11/1918 Place - - ? .....

Bur.: Place .....

Spouse's Father ..... Spouse's Mother .....

Comments:

****

M/ F	CHILDREN Given Name(s) / Comments (if any) Children	Surname	When Born Mo Dy Year	Where Born	Date 1st Marriage / To whom (line 2) / Comments (if any) Spouse	Died	
F	Emma Kathleen P11545*	KEWIN	01/17/1889	-	04/06/1919 Edwin (Ted) Corydon PRINGLE P11545	11/27/1954	1
M	George	KEWIN	01/22/1893 ?	CAN - ONT	xx/xx/19xx Dorothy DUNSTAN DO Kenneth Jewell & Alice (Pearce) Dunstan	xx/xx/19xx	2
F	Muriel Elaine	KEWIN	05/13/1887	-	/ /	07/11/1896	3

****

PRINCIPAL DATA SOURCE(s):

LINEAGE

Gwynneth RANEY

(7 Generations)

Gwynneth PRINGLE RANEY 1926 -
P115453
Reg RANEY 1916 -

GGG Gr GPs	GG Gr GPs	Gr Gr GPs	Great GPs	Grn Parents	Parents
? PRINGLE 16xx - xxxx	Robert PRINGLE 16xx - xxxx	Dunbar PRINGLE 17xx - 1791	James PRINGLE 1784 - 1860	George PRINGLE 1834 - 1xxx	Edwin PRINGLE 1874 - 1953
P	P1	P11	P115	P1154	P11545
? ? 16xx - xxxx	Jean GODDERAR 16xx - xxxx	Margaret COWAN 17xx - 1791	Anne ANDERSON 1796 - 1870	Catherine FRENCH 183x - 1xxx	Emma KEWIN 1889 - 1954

LINEAGE

Elizabeth SECORD

(7 Generations)

Elizabeth PRINGLE SECORD 1922 -
P115452
Allen SECORD 1920 - 1981

6GG Gr GPs	6G Gr GPs	Gr Gr GPs	Great GPs	Grn Parents	Parents
? PRINGLE 16xx - xxxx	Robert PRINGLE 16xx - xxxx	Dunbar PRINGLE 17xx - 1791	James PRINGLE 1784 - 1860	George PRINGLE 1834 - 1xxx	Edwin PRINGLE 1874 - 1953
P	P1	P11	P115	P1154	P11545
? ? 16xx - xxxx	Jean GODDERAR 16xx - xxxx	Margaret COWAN 17xx - 1791	Anne ANDERSON 1796 - 1870	Catherine FRENCH 183x - 1xxx	Emma KEWIN 1889 - 1954

LINEAGE

Robert George PRINGLE

(9 Generations)

Robert PRINGLE 1986 -
P11545113
-

GGGGGG GPs	GGGGG GPs	GGG Gr GPs	GG Gr GPs	Gr Gr GPs	Great GPs	Grn Parents	Parents
? PRINGLE 16xx - xxxx	Robert PRINGLE 16xx - xxxx	Dunbar PRINGLE 17xx - 1791	James PRINGLE 1784 - 1860	George PRINGLE 1834 - 1xxx	Edwin PRINGLE 1874 - 1953	John PRINGLE 1920 -	David PRINGLE 1949 -
P	P1	P11	P115	P1154	P11545	P115451	P1154511
? ? 16xx - xxxx	Jean GODDERAR 16xx - xxxx	Margaret COWAN 17xx - 1791	Anne ANDERSON 1796 - 1870	Catherine FRENCH 183x - 1xxx	Emma KEWIN 1889 - 1954	Diana SCHWARTZ 1921 -	Saundra WALSH 1958 -

LINEAGE

Laura Dawn PRINGLE

(9 Generations)

Laura PRINGLE 1983 -
P11545112
-

6666666 GPs	666666 GPs	66666 Gr GPs	6666 Gr GPs	666 Gr GPs	66 Gr GPs	Gr Gr GPs	Great GPs	Grn Parents	Parents
? PRINGLE 16xx - xxxx	Robert PRINGLE 16xx - xxxx	Dunbar PRINGLE 17xx - 1791	James PRINGLE 1784 - 1860	George PRINGLE 1834 - 1xxx	Edwin PRINGLE 1874 - 1953	John PRINGLE 1920 -	David PRINGLE 1949 -		
P	P1	P11	P115	P1154	P11545	P115451	P1154511		
? ? 16xx - xxxx	Jean GODDERAR 16xx - xxxx	Margaret COWAN 17xx - 1791	Anne ANDERSON 1796 - 1870	Catherine FRENCH 183x - 1xxx	Emma KEWIN 1889 - 1954	Diana SCHWARTZ 1921 -	Saundra WALSH 1958 -		

LINEAGE

Janet Elizabeth PRINGLE

(9 Generations)

Janet PRINGLE 1980 -
P11545111
-

GGGGGG GPs	GGGGG GPs	GGG Gr GPs	GG Gr GPs	Gr Gr GPs	Great GPs	Grn Parents	Parents
? PRINGLE 16xx - xxxx	Robert PRINGLE 16xx - xxxx	Dunbar PRINGLE 17xx - 1791	James PRINGLE 1784 - 1860	George PRINGLE 1834 - 1xxx	Edwin PRINGLE 1874 - 1953	John PRINGLE 1920 -	David PRINGLE 1949 -
P	P1	P11	P115	P1154	P11545	P115451	P1154511
? ? 16xx - xxxx	Jean GODDERAR 16xx - xxxx	Margaret COWAN 17xx - 1791	Anne ANDERSON 1796 - 1870	Catherine FRENCH 183x - 1xxx	Emma KEWIN 1889 - 1954	Diana SCHWARTZ 1921 -	Saundra WALSH 1958 -

LINEAGE

Duncan PRINGLE

(8 Generations)

Duncan PRINGLE 1952 -
P1154512
Nicole LEBEAU 1954 -

GGGGG GPs	GGG Gr GPs	GG Gr GPs	Gr Gr GPs	Great GPs	Grn Parents	Parents
? PRINGLE 16xx - xxxx	Robert PRINGLE 16xx - xxxx	Dunbar PRINGLE 17xx - 1791	James PRINGLE 1784 - 1860	George PRINGLE 1834 - 1xxx	Edwin PRINGLE 1874 - 1953	John PRINGLE 1920 -
P	P1	P11	P115	P1154	P11545	P115451
? ? 16xx - xxxx	Jean GODDERAR 16xx - xxxx	Margaret COWAN 17xx - 1791	Anne ANDERSON 1796 - 1870	Catherine FRENCH 183x - 1xxx	Emma KEWIN 1889 - 1954	Diana SCHWARTZ 1921 -

LINEAGE

David PRINGLE

(8 Generations)

David PRINGLE 1949 -
P1154511
Saundra WALSH 1958 -

GGGGG GPs	GGG Gr GPs	GG Gr GPs	Gr Gr GPs	Great GPs	Grn Parents	Parents
? PRINGLE 16xx - xxxx	Robert PRINGLE 16xx - xxxx	Dunbar PRINGLE 17xx - 1791	James PRINGLE 1784 - 1860	George PRINGLE 1834 - 1xxx	Edwin PRINGLE 1874 - 1953	John PRINGLE 1920 -
P	P1	P11	P115	P1154	P11545	P115451
? ? 16xx - xxxx	Jean GODDERAR 16xx - xxxx	Margaret COWAN 17xx - 1791	Anne ANDERSON 1796 - 1870	Catherine FRENCH 183x - 1xxx	Emma KEWIN 1889 - 1954	Diana SCHWARTZ 1921 -

LINEAGE

John Edwin Coryden PRINGLE

(7 Generations)

John PRINGLE 1920 -
P115451
Diana SCHWARTZ 1921 -

6GG Gr GPs	6G Gr GPs	Gr Gr GPs	Great GPs	Grn Parents	Parents
? PRINGLE 16xx - xxxx	Robert PRINGLE 16xx - xxxx	Dunbar PRINGLE 17xx - 1791	James PRINGLE 1784 - 1860	George PRINGLE 1834 - 1xxx	Edwin PRINGLE 1874 - 1953
P	P1	P11	P115	P1154	P11545
? ? 16xx - xxxx	Jean GODDERAR 16xx - xxxx	Margaret COWAN 17xx - 1791	Anne ANDERSON 1796 - 1870	Catherine FRENCH 183x - 1xxx	Emma KEWIN 1889 - 1954

FAMILY TREE

(One generation only)

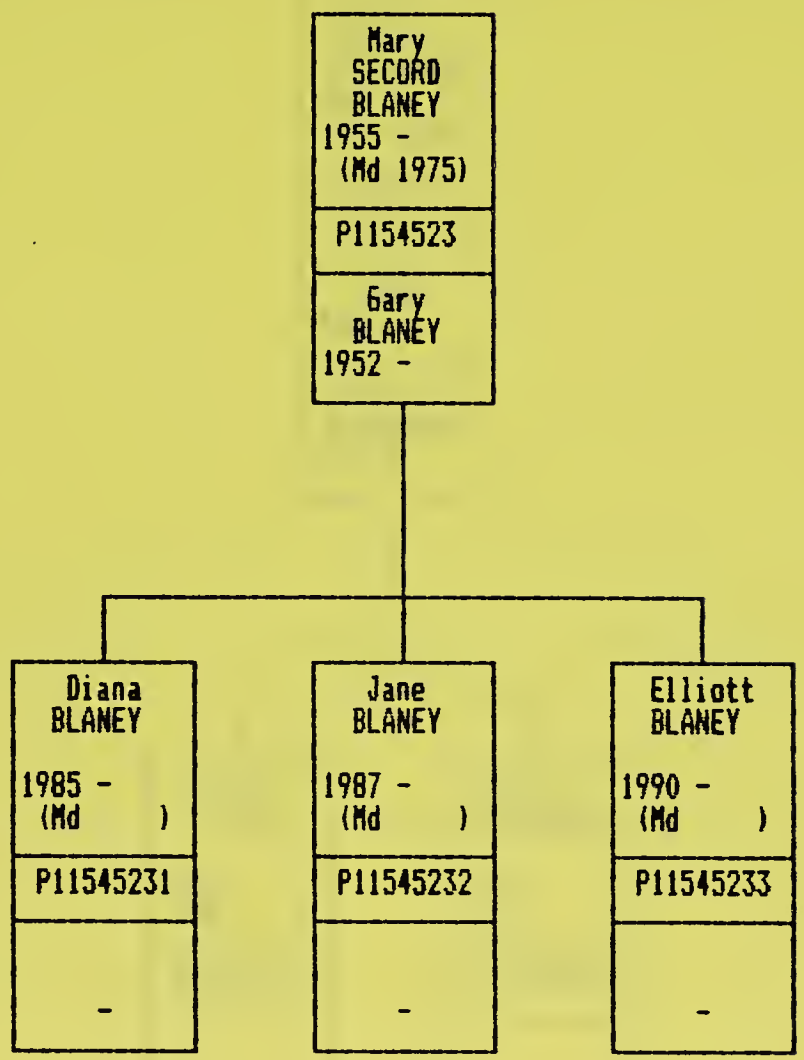

NOTE: Given names may be truncated. That is, names showing as a full 11 characters long, may be longer, including I vs II, II vs III, etc. A maximum of two marriages are shown.

Produced:- 02-28-1991

FAMILY TREE

(One generation only)

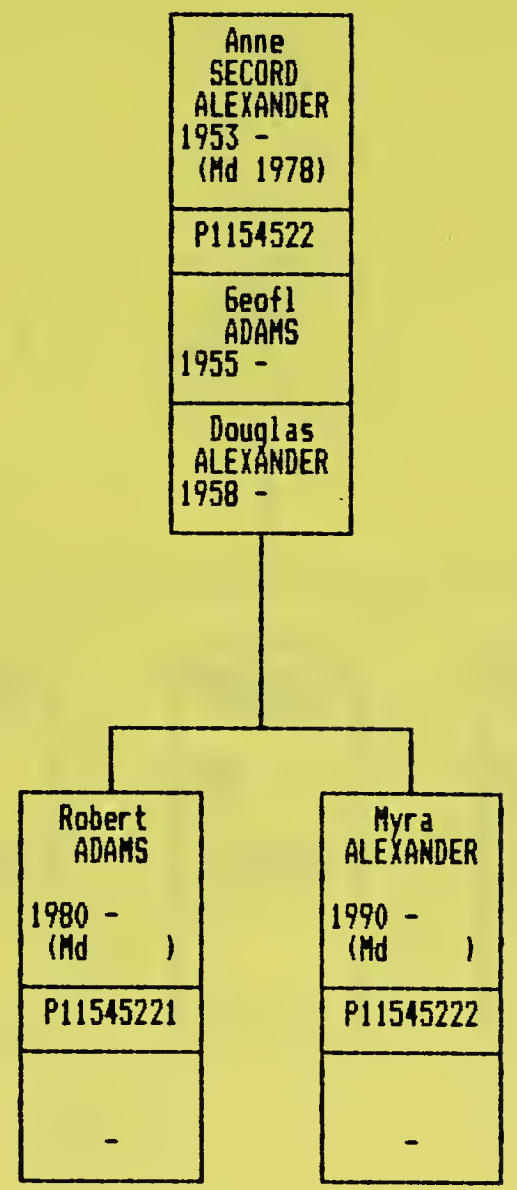

NOTE: Given names may be truncated. That is, names showing as a full 11 characters long, may be longer, including I vs II, II vs III, etc. A maximum of two marriages are shown.

Produced:- 02-28-1991

FAMILY TREE

(One generation only)

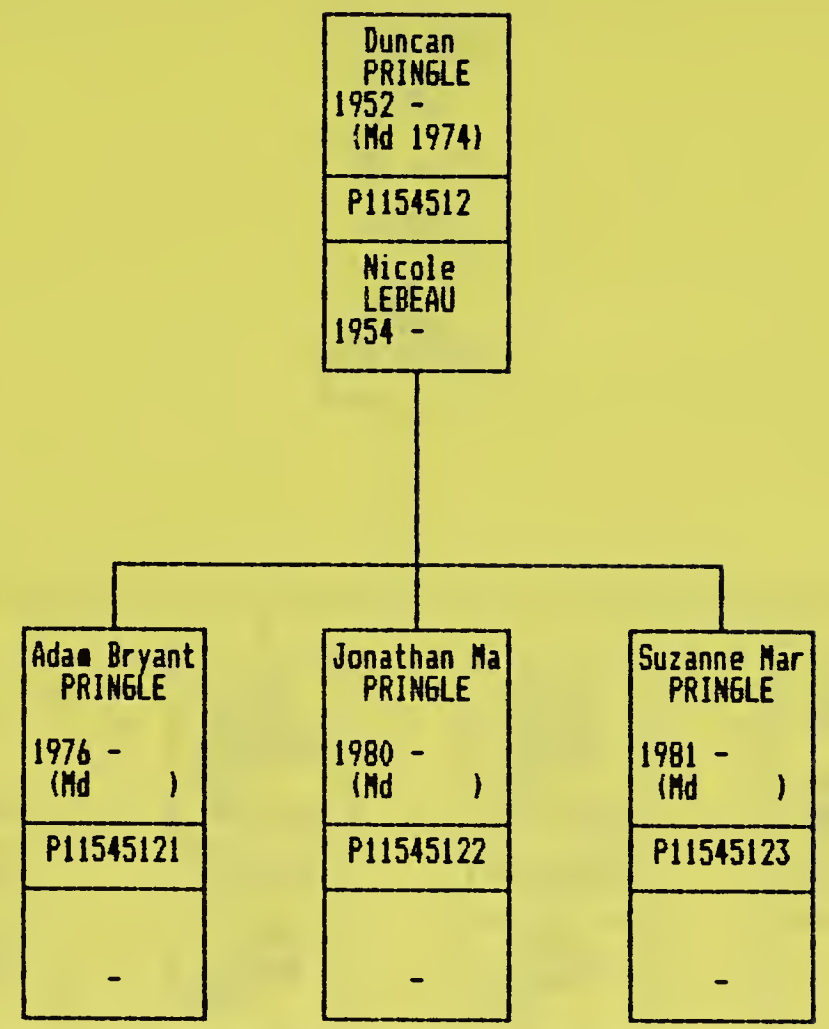

NOTE: Given names may be truncated. That is, names showing as a full 11 characters long, may be longer, including I vs II, II vs III, etc. A maximum of two marriages are shown.

Produced:- 02-28-1991

FAMILY TREE

(One generation only)

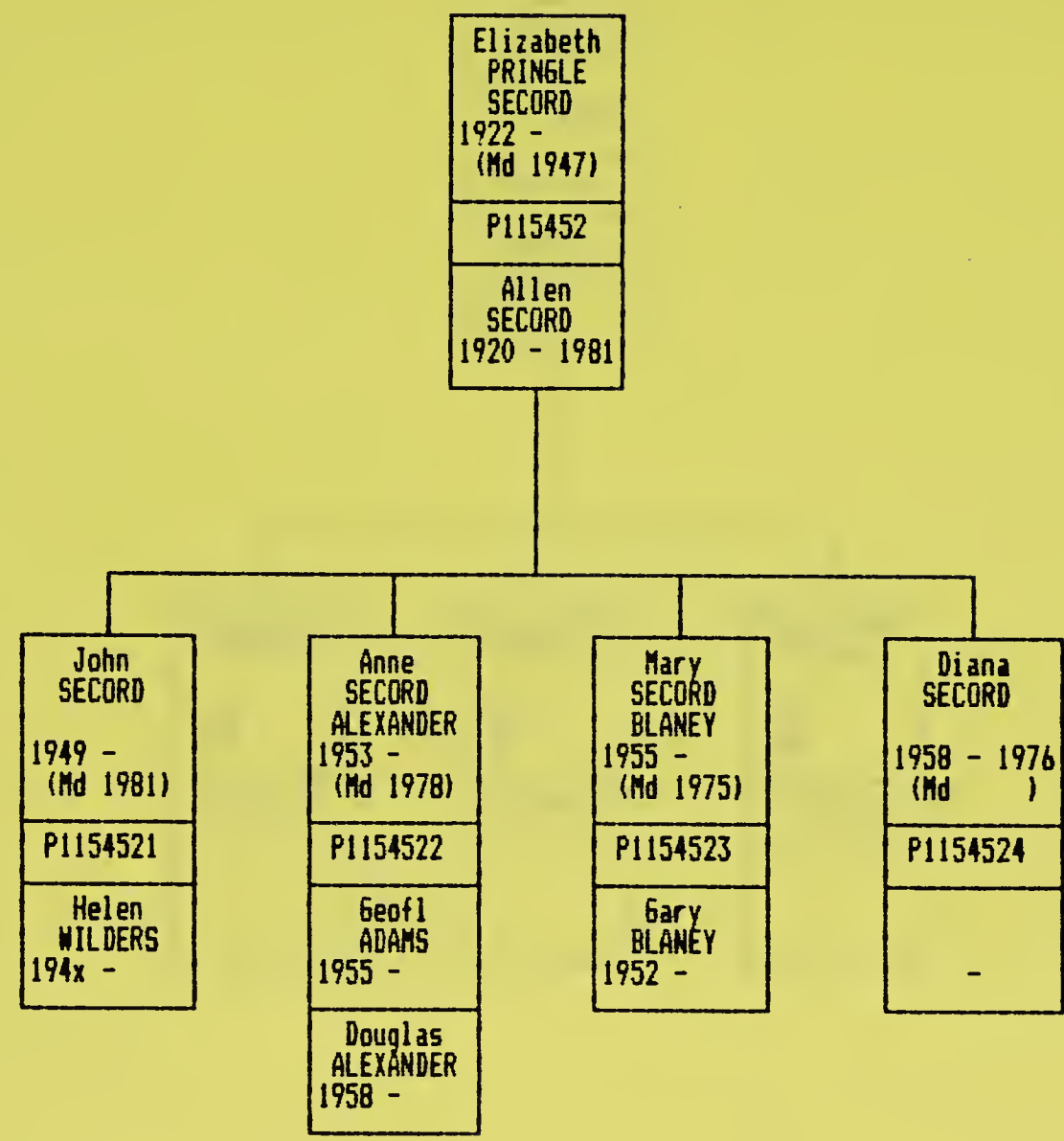

NOTE: Given names may be truncated. That is, names showing as a full 11 characters long, may be longer, including I vs II, II vs III, etc. A maximum of two marriages are shown.

Produced:- 02-28-1991

FAMILY TREE

(One generation only)

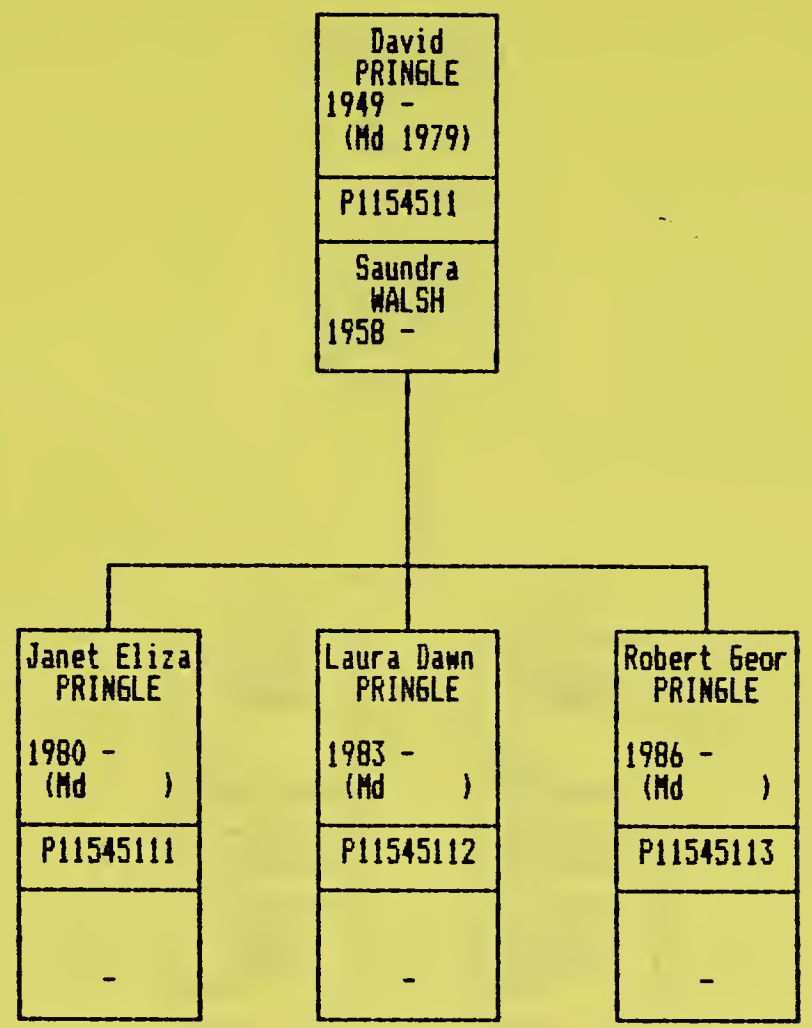

NOTE: Given names may be truncated. That is, names showing as a full 11 characters long, may be longer, including I vs II, II vs III, etc.
A maximum of two marriages are shown.

Produced:- 02-28-1991

FAMILY TREE

(One generation only)

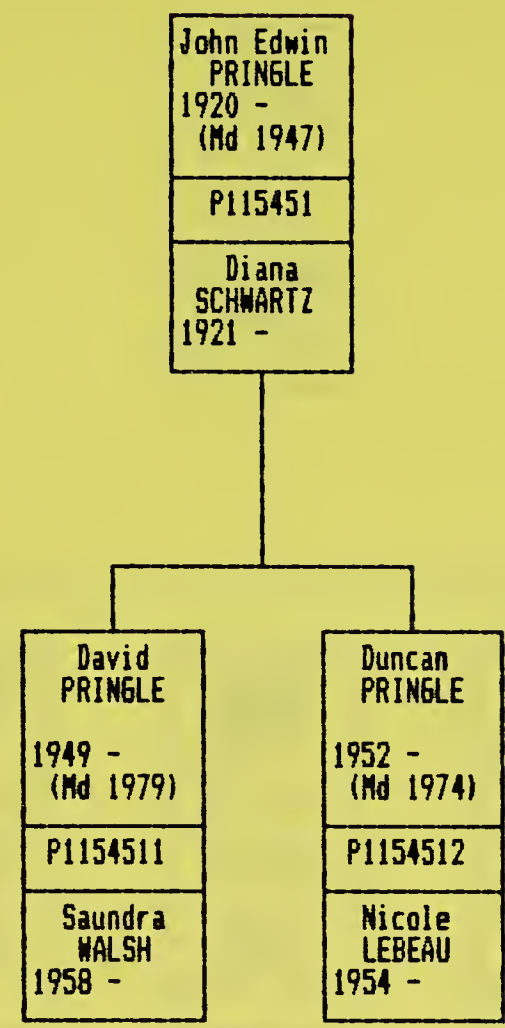

NOTE: Given names may be truncated. That is, names showing as a full 11 characters long, may be longer, including I vs II, II vs III, etc. A maximum of two marriages are shown.

Produced:- 02-28-1991

FAMILY TREE

(One generation only)

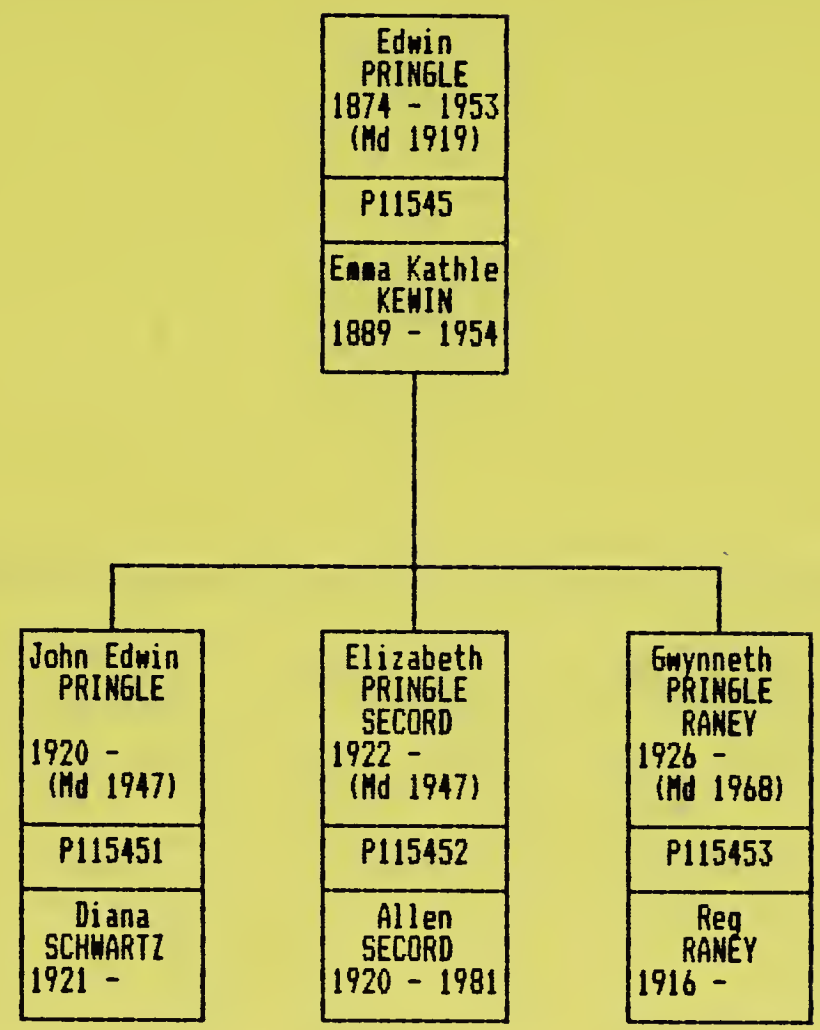

NOTE: Given names may be truncated. That is, names showing as a full 11 characters long, may be longer, including I vs II, II vs III, etc. A maximum of two marriages are shown.

Produced:- 02-28-1991

FAMILY TREE

(One generation only)

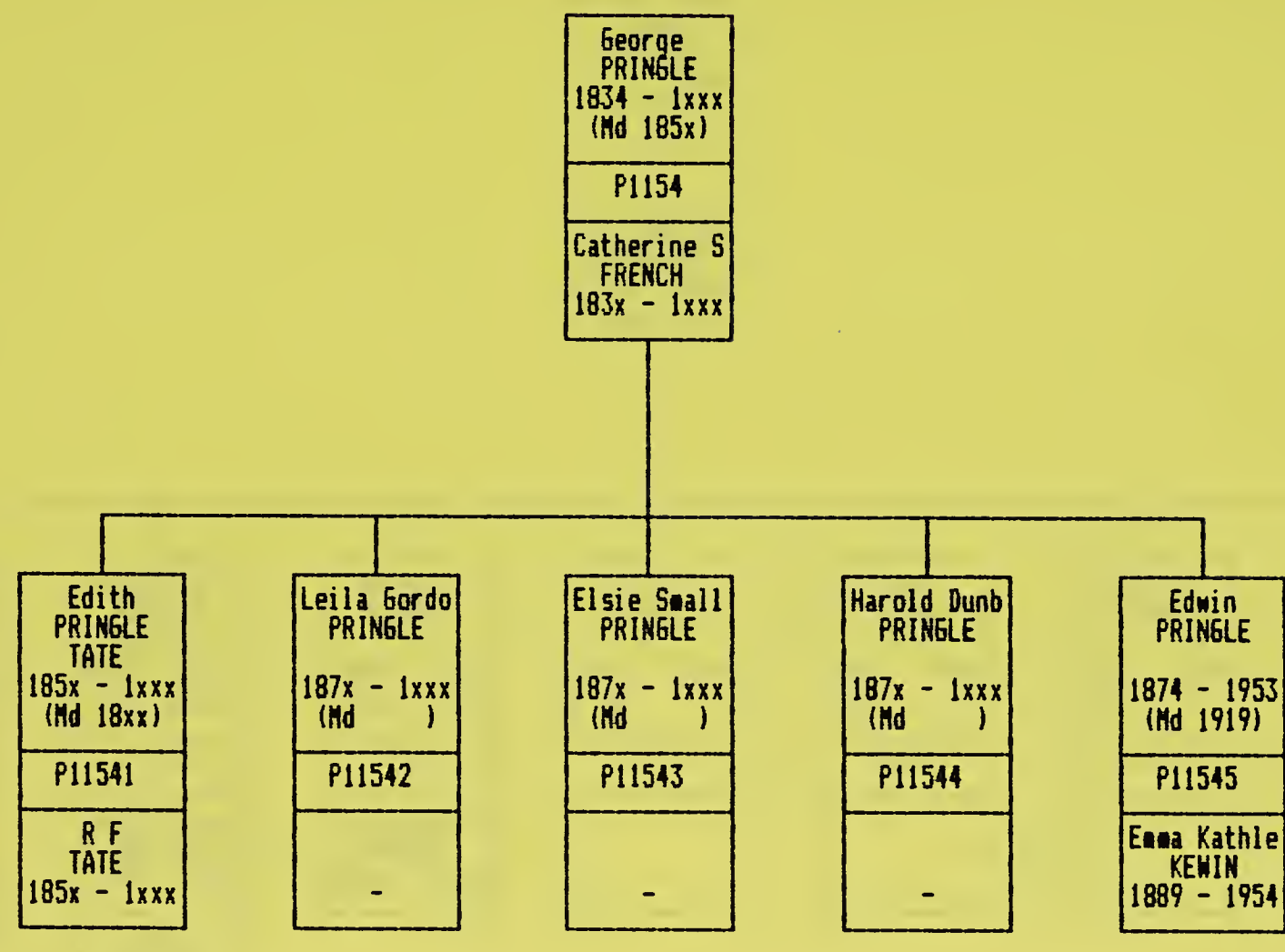

NOTE: Given names may be truncated. That is, names showing as a full 11 characters long, may be longer, including I vs II, II vs III, etc. A maximum of two marriages are shown.

Produced:- 02-28-1991

FAMILY TREE

(One generation only)

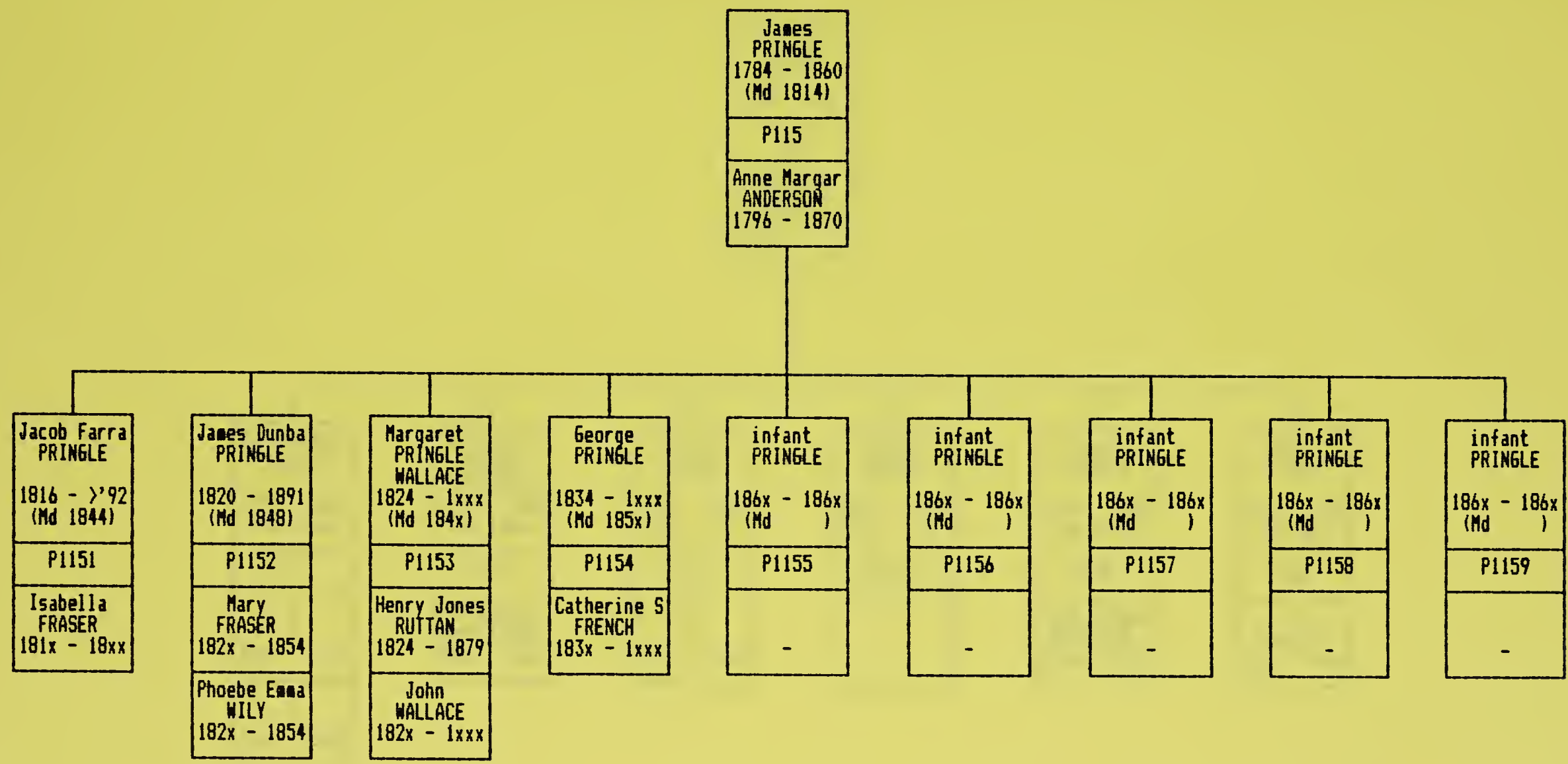

NOTE: Given names may be truncated. That is, names showing as a full 11 characters long, may be longer, including I vs II, II vs III, etc. A maximum of two marriages are shown.

Produced:- 02-28-1991

FAMILY TREE

(One generation only)

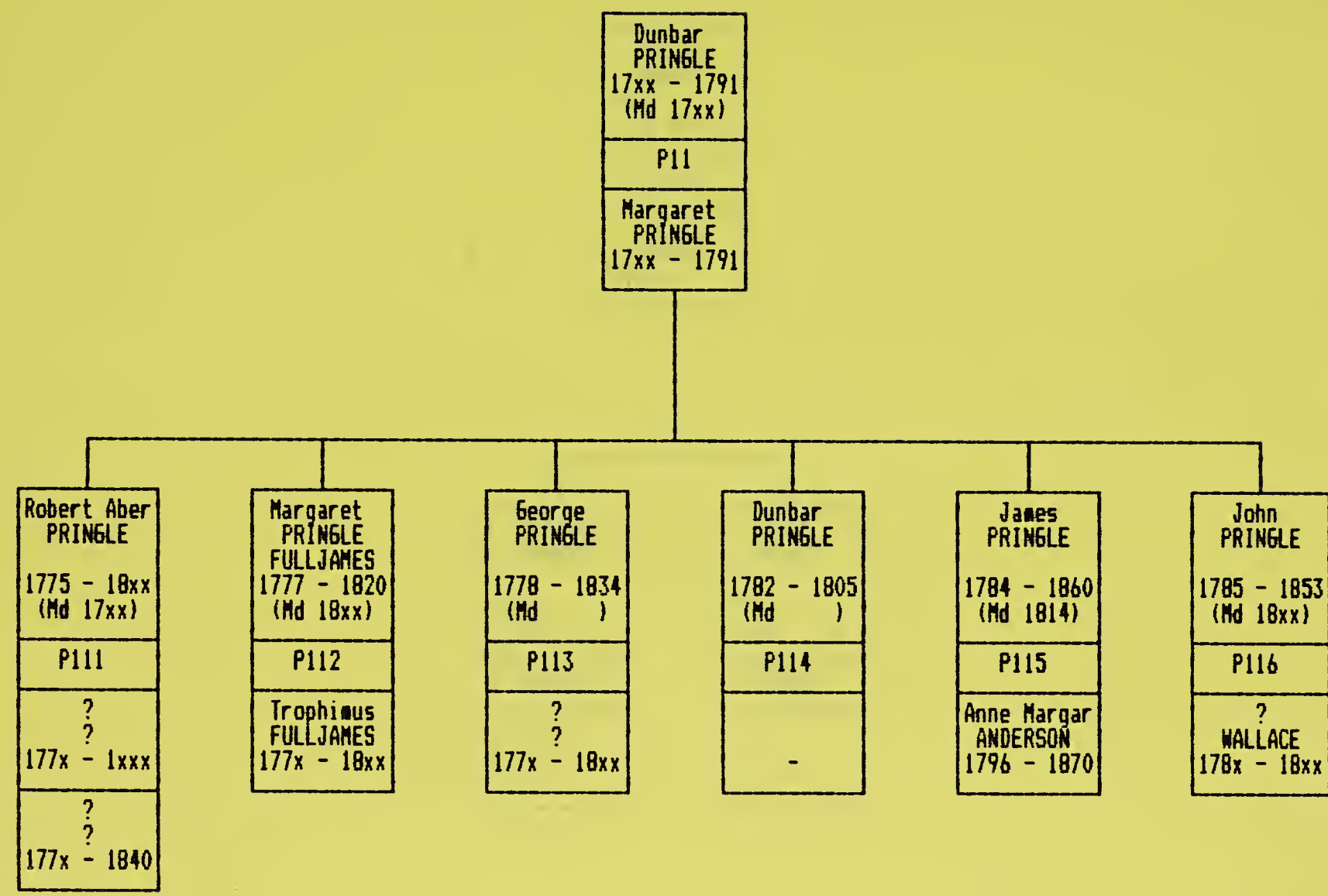

NOTE: Given names may be truncated. That is, names showing as a full 11 characters long, may be longer, including I vs II, II vs III, etc.
A maximum of two marriages are shown.

Produced:- 02-28-1991

FAMILY TREE

(One generation only)

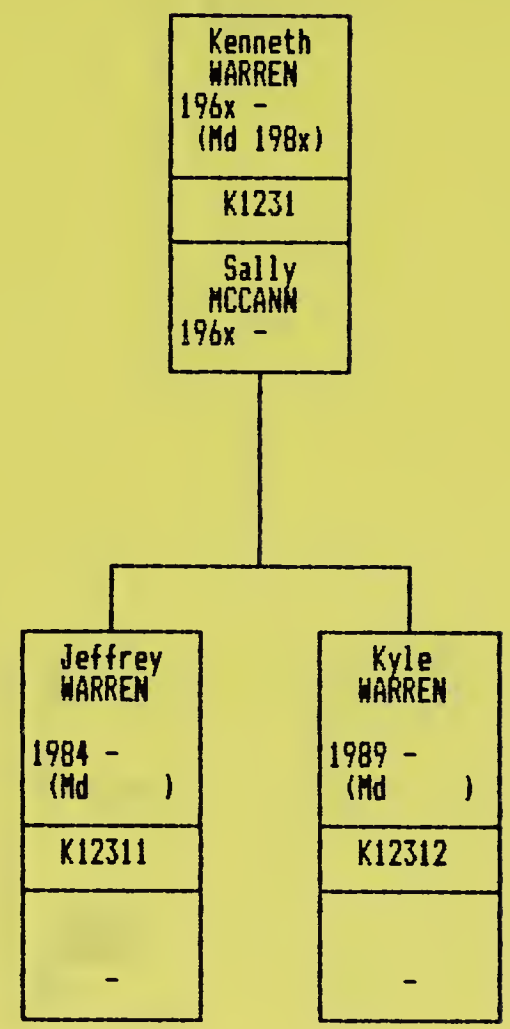

NOTE: Given names may be truncated. That is, names showing as a full 11 characters long, may be longer, including I vs II, II vs III, etc. A maximum of two marriages are shown.

Produced:- 02-28-1991

FAMILY TREE

(One generation only)

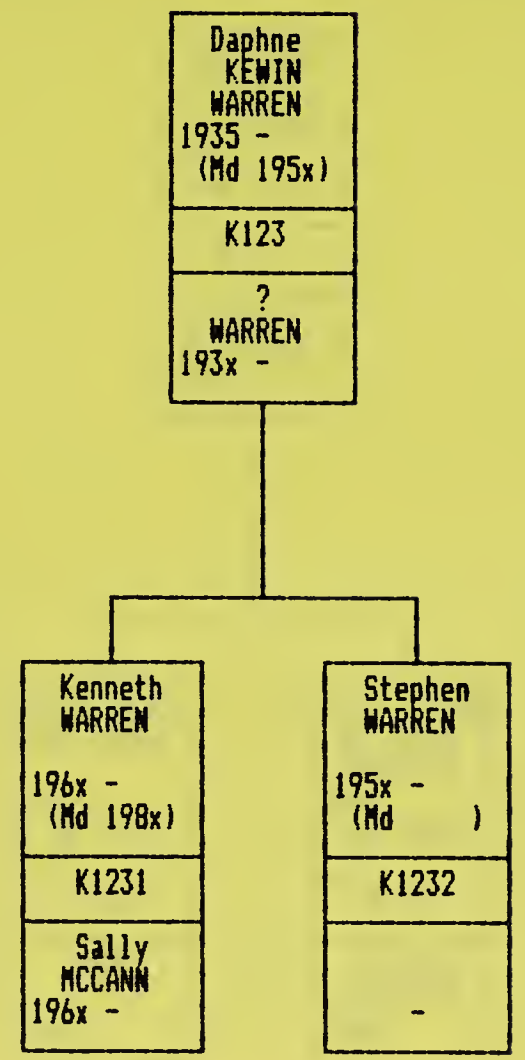

NOTE: Given names may be truncated. That is, names showing as a full 11 characters long, may be longer, including I vs II, II vs III, etc. A maximum of two marriages are shown.

Produced:- 02-28-1991

FAMILY TREE

(One generation only)

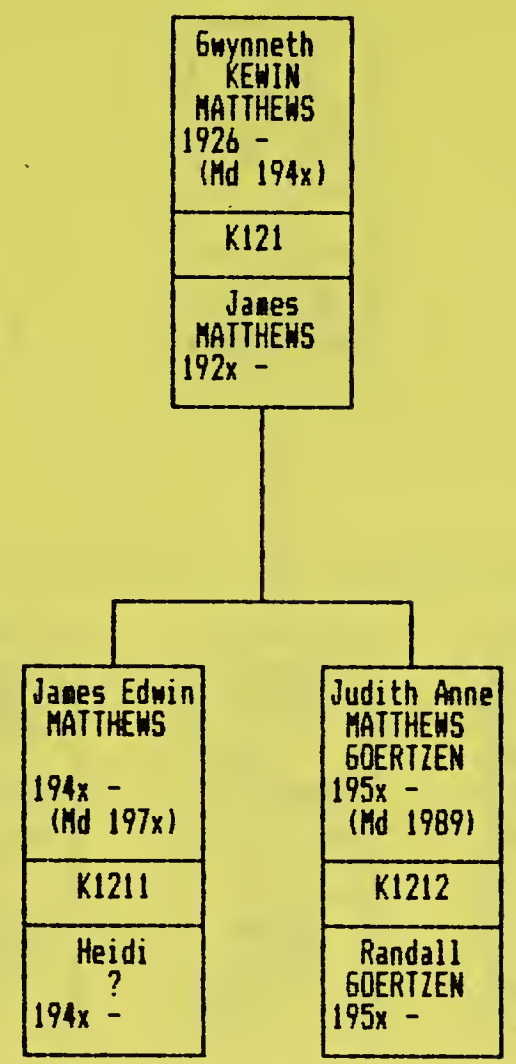

NOTE: Given names may be truncated. That is, names showing as a full 11 characters long, may be longer, including I vs II, II vs III, etc. A maximum of two marriages are shown.

Produced:- 02-28-1991

FAMILY TREE

(One generation only)

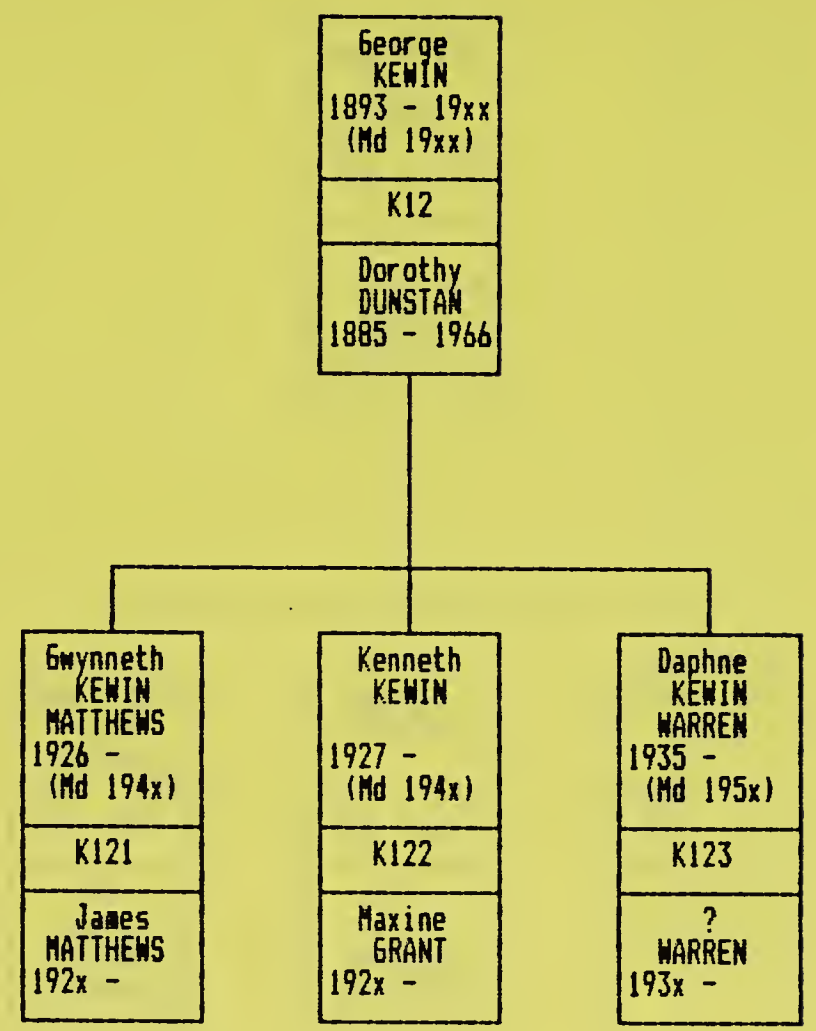

NOTE: Given names may be truncated. That is, names showing as a full 11 characters long, may be longer, including I vs II, II vs III, etc. A maximum of two marriages are shown.

Produced:- 02-28-1991

FAMILY TREE

(One generation only)

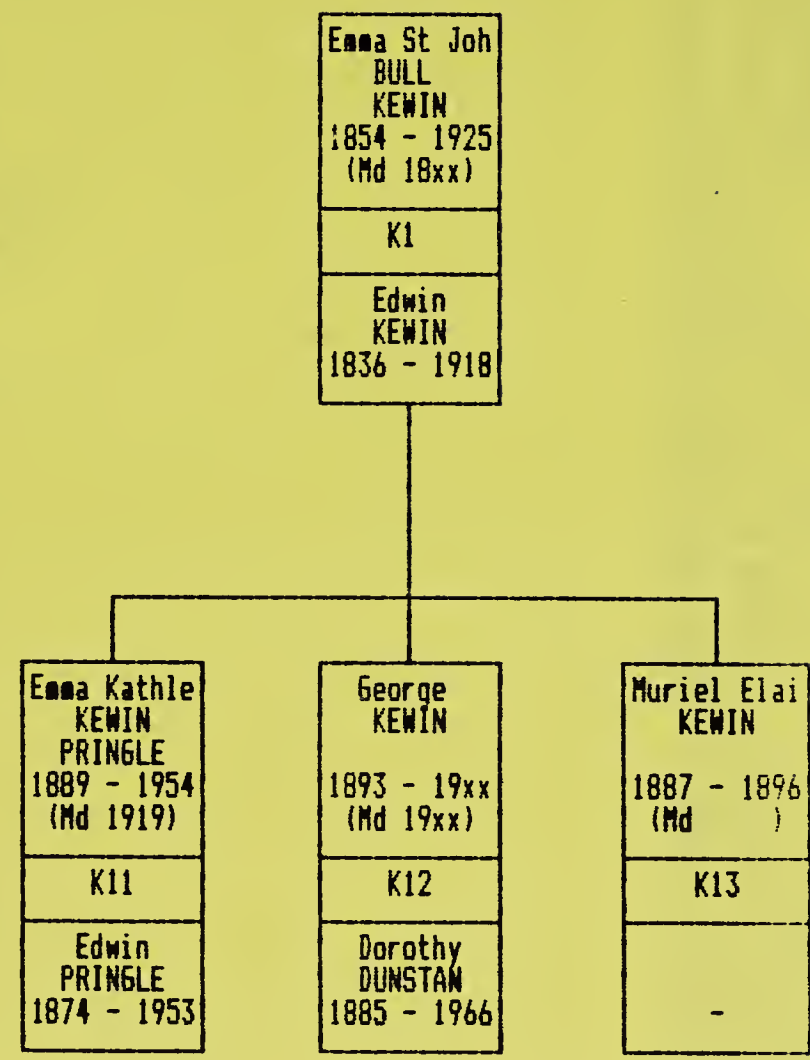

NOTE: Given names may be truncated. That is, names showing as a full 11 characters long, may be longer, including I vs II, II vs III, etc. A maximum of two marriages are shown.

Produced:- 02-28-1991

Key		Born	Died	Md#1	Brn	Res	Co/Loc	Source	Comments (47 of 61 chars)
A	ANDERSON, Benjamin	1699	1792	17xx				42	
A*	*ANDERSON, Hannah (WILSON)	1709	1793	17xx				42	
A1	ANDERSON, Samuel	1736	1836	1761				42	
A1*	*ANDERSON, Deliverance (BUTTS)	1743	1824	1761				42	
A11	ANDERSON, Joseph	1763	1853	178x				42	
A11*	*ANDERSON, Johanna (FARRAND)	176x	18xx	178x				42	
A111	ANDERSON, Robrt Isaac Dey Gray	1792	1874					42	
A112	PRINGLE, Anne Margaret (ANDERSON)	1796	1870	1814				42	P115*
A112*	*PRINGLE, James	1784	1860	1814				42	P115
A113	CLOWES, Delia (ANDERSON)	1800	1882	18xx				42	
A113*	*CLOWES, James	180x	18xx	18xx				42	
A1131	HILLS, Johanna (CLOWES)	18xx	18xx	18xx				42	
A1131*	*HILLS, Benjamin	18xx	18xx	18xx				42	
A1132	SHEARER, Mary (CLOWES)	18xx	<'92	18xx				42	
A1132*	*SHEARER, James	18xx	18xx	18xx				42	
A11321	SHEARER, son/daughter?	18xx	1xxx					42	
A11322	SHEARER, son/daughter?	18xx	1xxx					42	
A1133	SHEARER, Samuel	18xx	1xxx					42	
A12	ANDERSON, Ebenezer	176x	<'24					42	
A13	ANDERSON, James	176x	18xx	17xx				42	More than one son - daughters?
A13*	*ANDERSON, ? (?)	176x	18xx	17xx				42	More than one son - daughters?
A131	ANDERSON, ?	179x	-	-				42	
A14	ANDERSON, Cyrus	177x	<'24					42	
A15	ANDERSON, Thomas Gummersal	1779	1875					42	
A16	ANDERSON, George	17xx	xxxx	18xx				42	
A16*	*ANDERSON, ? (?)	17xx	xxxx	18xx				42	
A161	ANDERSON, Thos G	18xx	xxxx					42	
A17	MCKAY, Anne (Nancy) (ANDERSON)	17xx	18xx	18xx				42	No children
A17*	*MCKAY, Lawrence	17xx	18xx	18xx				42	No children
A2	ANDERSON, son/daughter?	173x	1xxx					42	
A3	ANDERSON, son/daughter?	173x	1xxx					42	
A4	ANDERSON, son/daughter?	174x	1xxx					42	
A5	ANDERSON, son/daughter?	174x	1xxx					42	
A6	ANDERSON, son/daughter?	174x	1xxx					42	
A7	ANDERSON, son/daughter?	174x	1xxx					42	
A8	ANDERSON, son/daughter?	174x	1xxx					42	
A9	ANDERSON, son/daughter?	174x	1xxx					42	
B	ABERCROMBIE, Alexander (Sir)	xxxx	xxxx	xxxx				42	
B*	*ABERCROMBIE, Elizabeth (BAIRD)	xxxx	xxxx	xxxx				42	DO William Baird
B1	ABERCROMBIE(*), James (Sir)	xxxx	xxxx					42	
B2	ABERCROMBIE(*), Alexander	xxxx	xxxx	xxxx				42	
B2*	*ABERCROMBIE, ? (?)	xxxx	xxxx	xxxx				42	
B21	ABERCROMBIE, George	xxxx	xxxx	xxxx				42	
B21*	*ABERCROMBIE, ? (?)	xxxx	xxxx	xxxx				42	
B211	ABERCROMBIE, Ralph (Genl Sir)	xxxx	1801	xxxx				42	
B3	CARGILL(*), Anne (ABERCROMBIE)	17xx	18xx	xxxx				42	
B3*	*CARGILL, Thomas	17xx	18xx	xxxx				42	
B31	CARGILL, son	18xx	18xx					42	Died young
B32	CARGILL, Elizabeth	18xx	18xx					42	Unmarried
B33	?, Anne (CARGILL)	18xx	18xx	18xx				42	
B33*	*?, ? (Prof)	18xx	18xx	18xx				42	
B331	?, son	18xx	18xx					42	Died young
B34	GODDERAR, ? (CARGILL)	18xx	18xx	18xx				42	
B341	ROBERTSON, Mary (GODDERAR)	18xx	18xx	18xx				42	
B341*	*ROBERTSON, John	18xx	18xx	18xx				42	
B342	PRINGLE, Jean (GODDERAR)	18xx	18xx	18xx				42	P1*
B342*	*PRINGLE, Robert	18xx	18xx	18xx				42	P1
J	JELLETT, ?	xxxx	xxxx	xxxx					
J*	*JELLETT, ? (?)	xxxx	>'73	xxxx					
J1	JELLETT, Morgan	xxxx	1881	xxxx					

Key	Name	Born-Died-Md#1	Brn-Res-Co/Loc	Source	Comments (47 of 61 chars)
J1*	*JELLETT, Sara Susan Margaret (BULL)	1850-1900-187e			
J11	JELLETT, Morgan	1877-1953-1911	ONT		
J11*	*JELLETT, Beatrice Mary (BICKFORD)	187x-195x-xxxx	ONT		
J12	ILER, Sophia Marguerite (JELLETT)	1882-1968-1914	ONT		J65+ (JBASE)
J12*	*ILER, Burritt	1851-1929-1877	ONT		J65 (JBASE)
J2	PLEESE, Kate (JELLETT)	xxxx-xxxx-xxxx			
J2*	*PLEESE, Rev. T.	xxxx-xxxx-xxxx			
J3	JELLETT, (Judge)	- -			Picton
K	BULL, ?	xxxx-xxxx-xxxx			
K*	*BULL, ? (?)	xxxx-xxxx-xxxx			
K1	KEWIN, Emma St John's (BULL)	1854-1925-18xx			
K1*	*KEWIN, Edwin	1836-1918-18xx			
K11	PRINGLE, Emma Kathleen (KEWIN)	1889-1954-1919		43	P11545*
K11*	*PRINGLE, Edwin (Ted) Corydon	1874-1953-1919		43	P11545
K12	KEWIN, George	1893-19xx-19xx	ONT	43	
K12*	*KEWIN, Dorothy Perryn (DUNSTAN)	1885-1966-19xx	ONT	43	DO Kenneth Jewell & Alice (Pearce) Dunstan
K121	MATTHEWS, Gwynneth Joan (KEWIN)	1926- -1954	ON ONT	43	
K121*	*MATTHEWS, James Nelles	192x- -1954	ON ONT	43	SO James Gerrie and Bonnie Madeleine (?) Matthe
K1211	MATTHEWS, James Edwin	1959- -1986	ON ON Simcoe	43	
K1211*	*MATTHEWS, Heidi (?)	195x- -1986	ONT ON Simcoe	43	
K1212	GOERTZEN, Judith Anne (MATTHEWS)	1963- -1989	ON ON Simcoe	43	
K1212*	*GOERTZEN, Randall	196x- -1989	ONT ON Simcoe	43	
K122	KEWIN, Kenneth	1927- -194x	ONT ONT	43	
K122*	*KEWIN, Maxine (GRANT)	192x- -194x	ONT ONT	43	
K123	WARREN, Daphne (KEWIN)	1935- -195x	ONT	43	Dvc'd
K123*	*WARREN, ?	193x- -195x		43	Dvc'd
K1231	WARREN, Kenneth	196x- -198x	ONT	43	
K1231*	*WARREN, Sally (MCCANN)	196x- -198x	ONT	43	
K12311	WARREN, Jeffrey	1984- -	ONT	43	
K12312	WARREN, Kyle	1989- -	ONT	43	
K1232	WARREN, Stephen	195x- -	ONT	43	Unmarried
K13	KEWIN, Muriel Elaine	1887-1896-			
K2	JELLETT, Sara S M (BULL)	1850-1900-xxxx			J1*
K2*	*JELLETT, Morgan	xxxx-1881-xxxx			J1
K3	KELLY, Lucy Jellett (BULL)	xxxx-xxxx-xxxx	ONT		
K3*	*KELLY, ?	xxxx-xxxx-xxxx			
K31	BALLANTINE, Gretchen (KELLY)	xxxx-xxxx-xxxx			
K31*	*BALLANTINE, Dr. ?	xxxx-xxxx-xxxx			
L	PREVOST, ?	16xx-1xxx-1xxx		42	
L*	*PREVOST, ? (?)	16xx-1xxx-1xxx		42	
L1	LOW, ? (PREVOST)	17xx-17xx-17xx		42	
L1*	*LOW, ?	17xx-17xx-17xx		42	
L11	FRANKLIN, ? (LOW)	17xx-1xxx-17xx		42	
L11*	*FRANKLIN, ? (Col)	17xx-1xxx-17xx		42	
L12	VANRANSELLAR, ? (LOW)	17xx-1xxx-17xx		42	
L12*	*VANRANSELLAR, ?	17xx-1xxx-17xx		42	
L13	HEDDEND, Margaret (FARRAND) (LOW)	17xx-17xx-1752		42	
L13*	*FARRAND, ? (Dr)	17xx-1764-1752		42	
L13+	+HEDDEN, Elijah	17xx-18xx->'64		42	
L131	FARRAND(*), Jacob	17xx-1803-		42	
L132	VALENTINE(*), Catherine (FARRAND)	1756-18xx-178x		42	Md 1784/5?
L132*	*VALENTINE, John	175x-18xx-178x		42	*d 1784/5?
L133	ANDERSON(*), Johanna (FARRAND)	1759-18xx-178x		42	Md 1784/5? - A11*
L133*	*ANDERSON, Joseph	175x-18xx-178x		42	Md 1784/5? - A11
L134	ANDERSON(*), John	1754-1xxx-		42	
L135	ANDERSON(*), Jacob	1763-1xxx-		42	
L136	HEDDEN(+), son/daughter?	176x-1xxx-		42	
L137	HEDDEN(+), son/daughter?	176x-1xxx-		42	
L138	HEDDEN(+), son/daughter?	177x-1xxx-		42	
L139	HEDDEN(+), son/daughter?	177x-1xxx-		42	

Key	Name	Born-Died-Md#1	Brn-Res-Co/Loc	Source	Comments (47 of 61 chars)
M	===== MACDONELL, John	17xx-18xx-17xx		42	
M*	*MACDONELL, Jane (CHISHOLM)	17xx-18xx-17xx		42	
M1	===== MACDONELL, Archibald	17xx-1xxx-17xx		42	
M1*	*MACDONELL, ? (FRASER)	17xx-1xxx-17xx		42	
M11	===== MACDONELL, John	17xx-1xxx-		42	
M12	===== MACDONELL, James (Capt)	17xx-1xxx-		42	
M13	===== MACDONELL, Mary (MACDONELL)	17xx-1xxx-17xx		42	
M13*	*MACDONELL, Donald Aeneas	17xx-1xxx-17xx		42	
M14	===== MACDONELL, Harriet (MACDONELL)	17xx-1xxx-17xx		42	
M14*	*MACDONELL, Duncan (Col)	17xx-1xxx-17xx		42	
M15	===== TREADWELL, Ellen (MACDONELL)	17xx-1xxx-17xx		42	
M15*	*TREADWELL, Charles P	17xx-1xxx-17xx		42	
M16	===== FRASER, Anne (MACDONELL)	17xx-1xxx-17xx		42	
M16*	*FRASER, Alexander (Col)	17xx-1xxx-17xx		42	
M17	===== MCCANN, Madeline (MACDONELL)	17xx-1xxx-17xx		42	
M17*	*MCCANN, ?	17xx-1xxx-17xx		42	
M18	===== MACDONELL, son/daughter	17xx-1xxx-		42	
M2	===== MACDONELL, Allan (Capt Lt)	17xx-1xxx-17xx		42	
M2*	*MACDONELL, ? (MACDONALD)	17xx-1xxx-17xx		42	
M2+	+MACDONELL, ? (MACDONELL)	17xx-1xxx-17xx		42	
M21	===== MACDONELL, James	17xx-1xxx-		42	
M22	===== MACDONELL, John	17xx-1xxx-		42	
M23	===== SCOTT, ? (MACDONELL)	17xx-1xxx-17xx		42	
M23*	*SCOTT, William J (Dr)	17xx-1xxx-17xx		42	
M24	===== FRASER, ? (MACDONELL)	17xx-1xxx-17xx		42	
M24*	*FRASER, Simon	17xx-1xxx-17xx		42	
M25	===== GRANT, ? (MACDONELL)	17xx-1xxx-17xx		42	
M25*	*GRANT, ?	17xx-1xxx-17xx		42	
M26	===== FRASER, Mary (MACDONELL)	17xx-1xxx-17xx		42	
M26*	*FRASER, Richard Duncan (Col)	17xx-1xxx-17xx		42	
M27	===== MCDONELL, Isabella (MACDONELL)	17xx-1xxx-17xx		42	
M27*	*MCDONELL, Angus	17xx-1xxx-17xx		42	
M3	===== MACDONELL, Alexander	17xx-1xxx-17xx		42	
M3*	*MACDONELL, ? (GRANT)	17xx-1xxx-17xx		42	
M31	===== MACDONELL, Archy	17xx-1xxx-		42	
M32	===== CHISHOLM, ? (MACDONELL)	17xx-1xxx-17xx		42	
M32*	*CHISHOLM, C (Col)	17xx-1xxx-17xx		42	
M33	===== MACDONELL, John	17xx-1xxx-		42	Died of wounds
M4	===== MACDONELL, Ranald (Reginald?)	17xx-1xxx-17xx		42	
M4*	*MACDONELL, ? (ROBERTSON)	17xx-1xxx-17xx		42	
M41	===== MACDONELL, Donald	17xx-1xxx-17xx		42	
M41*	*MACDONELL, ? (?)	17xx-1xxx-17xx		42	
M411	===== MACDONELL, son	17xx-1xxx-		42	
M412	===== MACDONELL, Alister	17xx-1xxx-		42	
M42	===== BLACKLOCK, ? (MACDONELL)	17xx-1xxx-17xx		42	
M42*	*BLACKLOCK, Ambrose	17xx-1xxx-17xx		42	
M43	===== WALKER, ? (MACDONELL)	17xx-1xxx-17xx		42	
M43*	*WALKER, ?	17xx-1xxx-17xx		42	
M5	===== MACDONELL, Roderick	17xx-1xxx-		42	Priest
M6	===== MCLEOD, Catherine (MACDONELL)	17xx-1xxx-17xx		42	
M6*	*MCLEOD, William	17xx-1xxx-17xx		42	
M7	===== MACDONALD, Harriet (MACDONELL)	17xx-1xxx-17xx		42	
M7*	*MACDONALD, ?	17xx-1xxx-17xx		42	
M8	===== FRASER, Mary (MACDONELL)	17xx-1xxx-17xx		42	No children
M8*	*FRASER, Thomas (Col)	17xx-1xxx-17xx		42	No children
M9	===== MCLEAN, Isabella (MACDONELL)	17xx-1xxx-17xx		42	
M9*	*MCLEAN, Neil (Col)	17xx-1xxx-17xx		42	
M91	===== MCLEAN, Archibald	17xx-1xxx-		42	
M92	===== MCLEAN, Alexander	17xx-1xxx-		42	
M93	===== MCLEAN, John	17xx-1xxx-		42	

```
Key --------1-------2-------3-------4-------5-------6-------7-------8-------9-------A-----------------------------------Born-Died-Md#1--Brn-Res-Co/Loc--Source-----Comments (47 of 61 chars)----------
M94                        |===== FRASER, ? (MCLEAN)                                  17xx-1xxx-17xx                 42
M94*                       |     *FRASER, ?                                           17xx-1xxx-17xx                 42
M95                        |===== HOPPER, ? (MACDONELL)                               17xx-1xxx-17xx                 42
M95*                       |     *HOPPER, ?                                           17xx-1xxx-17xx                 42
M96                        |===== MCGILLIVRAY, ? (MACDONELL)                          17xx-1xxx-17xx                 42
M96*                       |     *MCGILLIVRAY, ?                                      17xx-1xxx-17xx                 42
M97                        |===== TREW, ? (MACDONELL)                                 17xx-1xxx-17xx                 42
M97*                       |     *TREW, ?                                             17xx-1xxx-17xx                 42
M98                        |===== MACDONELL, Jessie                                   17xx-1xxx-                     42
O          |===== OGLIVY, Walter (Sir)                                                13xx-1392-13xx                 42
O*         |     *OGLIVY, ? (?)                                                       13xx-1392-13xx                 42
O1                |===== OGLIVY, ? (Lord)                                             13xx-1411-13xx                 42
O2                |===== OGLIVY, Walter (Sir)                                         13xx-14xx-1xxx                 42
O2*               |     *OGLIVY, Isabel (deDURWARD)                                   13xx-14xx-1xxx                 42
O21                        |===== OGLIVY, John (Sir)                                  14xx-14xx-                     42
O22                        |===== OGLIVY, Walter (Sir)                                14xx-14xx-14xx                 42
O22*                       |     *OGLIVY, ? (SINCLAIR)                                14xx-14xx-14xx                 42         DO Sir John Sinclair
O22+                       |     +OGLIVY, Mary (Lady) (DOUGLAS)                       14xx-14xx-14xx                 42
O221                             |===== OGLIVY, James (Lord)                          1xxx-1xxx-1xxx                 42
O221*                            |     *OGLIVY, ? (?)                                 1xxx-1xxx-1xxx                 42
O2211                                  |===== OGLIVY, Walter                          1xxx-1xxx-                     42         Died before his father
O2212                                  |===== OGLIVY, James                           1xxx-1xxx-                     42
O2213                                  |===== OGLIVY, Patrick (Col)                   1xxx-1xxx-1xxx                 42
O2213*                                 |     *OGLIVY, Elizabbeth (ABERCROMBIE)  (BAIRD)  1xxx-1xxx-1xxx              42         B* - 1st wo Sir Alexander Abercrombie
O22131                                       |===== FRASER, Anne (OGLIVY)             1xxx-1xxx-1xxx                 42
O22131*                                      |     *FRASER, John                      1xxx-1xxx-1xxx                 42
O221311                                            |===== WILSON, ? (FRASER)          1xxx-1xxx-1xxx                 42
O221311*                                           |     *WILSON, ?                   1xxx-1xxx-1xxx                 42
O221312                                            |===== COWAN, ?                    1xxx-1xxx-1xxx                 42
O221312*                                           |     *COWAN, ?                    1xxx-1xxx-1xxx                 42
O22131211                                                |===== PRINGLE, Margaret (COWAN)  1xxx-1xxx-1xxx            42         P11*
O22131211*                                               |     *PRINGLE, Dunbar        1xxx-1xxx-1xxx                 42         P11
O221313                                            |===== FOREST, ? (FRASER)          1xxx-1xxx-1xxx                 42
O221313*                                           |     *FOREST, ?                   1xxx-1xxx-1xxx                 42
O221314                                            |===== FRASER, John                1xxx-1xxx-                     42
O221315                                            |===== FRASER, James               1xxx-1xxx-                     42
O221316                                            |===== FRASER, Elizabeth           1xxx-1xxx-                     42
P          |===== PRINGLE, ?                                                          16xx-xxxx-xxxx                 42
P*         |     *PRINGLE, ? (?)                                                      16xx-xxxx-xxxx                 42
P1                |===== PRINGLE, Robert                                              16xx-xxxx-17xx                 42
P1*               |     *PRINGLE, Jean (GODDERAR)                                     16xx-xxxx-17xx                 42
P11                        |===== PRINGLE, Dunbar                                     17xx-1791-17xx                 42
P11*                       |     *PRINGLE, Margaret (COWAN)                           17xx-1791-17xx                 42
P111                             |===== PRINGLE, Robert Abercrombie                   1775-18xx-17xx                 42
P111*                            |     *PRINGLE, ? (?)                                177x-1xxx-17xx                 42         Sicialian lady of rank - died young - no childr
P111+                            |     +PRINGLE, ? (?)                                177x-1840-18xx                 42         No issue
P112                             |===== FULLJAMES, Margaret (PRINGLE)                 1777-1820-18xx                 42
P112*                            |     *FULLJAMES, Trophimus                          177x-18xx-18xx                 42
P1121                                  |===== FULLJAMES, Thomas                       18xx-18xx-                     42
P1122                                  |===== FULLJAMES, Robert                       18xx-18xx-                     42
P1123                                  |===== FULLJAMES, John Pringle                 18xx-18xx-                     42
P1124                                  |===== FULLJAMES, son                          18xx-<'92-                     42
P1125                                  |===== FULLJAMES, daughter                     18xx-18xx-                     42
P1126                                  |===== FULLJAMES, daughter                     18xx-18xx-                     42
P1127                                  |===== BALFOUR, Margaret (FULLJAMES)           18xx-<'92-                     42
P1127*                                 |     *BALFOUR, Capt                           18xx-18xx-                     42
P113                             |===== PRINGLE, George                               1778-1834-                     42         No issue?
P113*                            |     *PRINGLE, ? (?)                                177x-18xx-                     42
P114                             |===== PRINGLE, Dunbar                               1782-1805-                     42
P115                             |===== PRINGLE, James                                1784-1860-1814                 42

Key --------1-------2-------3-------4-------5-------6-------7-------8-------9-------A-----------------------------------Born-Died-Md#1--Brn-Res-Co/Loc--Source-----Comments (47 of 61 chars)----------
```

Key		Born-Died-Md#1	Brn-Res-Co/Loc	Source	Comments (47 of 61 chars)
P115*	*PRINGLE, Anne Margaret (ANDERSON)	1796-1870-1814		42	
P1151	|===== PRINGLE, Jacob Farrand	1816->'92-1844		42	
P1151*	|*PRINGLE, Isabella (FRASER)	181x-18xx-1844		42	
P11511	|===== CORBETT, Anne (MOREN) (PRINGLE)	186x-1xxx-188x		42	
P11511*	|*MOREN, Arthur	18xx-1883-18xx		42	
P11511+	|+CORBETT, Frederick D	18xx-1xxx-188x		42	
P115111	|===== MOREN(*), son	18xx-18xx-		42	Died in infancy
P115112	|===== MOREN(*), Arthur Fraser Stirling	18xx-18xx-18xx		42	
P115112*	|*MOREN, Johanna Rubidge (HAZEN)	18xx-18xx-18xx		42	
P11512	|===== HALL, Margaret (PRINGLE)	18xx-1xxx-18xx		42	
P11512*	|*HALL, Francis J	18xx-<'92-18xx		42	
P115121	|===== HALL, Geo Russell	18xx-1xxx-		42	
P115122	|===== HALL, James	18xx-1xxx-		42	
P115123	|===== HALL, Harry Leslie	18xx-1xxx-		42	
P115124	|===== HALL, Farrand	18xx-1xxx-		42	
P11513	|===== RITCHIE, Isabella (PRINGLE)	18xx-1xxx-18xx		42	
P11513*	|*RITCHIE, Thomas	18xx-1xxx-18xx		42	
P115131	|===== RITCHIE, Thomas Fraser	18xx-1xxx-		42	
P115132	|===== RITCHIE, John William Pringle	18xx-1xxx-		42	
P115133	|===== RITCHIE, Lewis Farrand	18xx-1xxx-		42	
P115134	|===== RITCHIE, Mary Christine	18xx-1xxx-		42	
P115135	|===== RITCHIE, Beatrice Lichtenstein	18xx-1xxx-		42	
P115136	|===== RITCHIE, Edith Isabella	18xx-1xxx-		42	
P115137	|===== RITCHIE, Ella Almon	18xx-1xxx-		42	
P11514	|===== PRINGLE, James Farrand	18xx-1xxx-		42	
P11515	|===== PRINGLE, Alexander Fraser	18xx-1xxx-18xx		42	
P11515*	|*PRINGLE, Clara (ALLEN)	18xx-1xxx-18xx		42	
P11516	|===== PRINGLE, Robert Abercrombie	18xx-1xxx-18xx		42	
P11516*	|*PRINGLE, Emma Ada (VANARSDALE)	18xx-1xxx-18xx		42	
P115161	|===== PRINGLE, James Farrand	1876-1xxx-		42	
P115161*	|*PRINGLE, Mildred (?)	18xx-1959-19xx		42	
P1151611	|===== PRINGLE, Win	18xx-197x-		43	
P1151612	|===== PRINGLE, James F	18xx-1987-19xx		43	
P1151612*	|*PRINGLE, W Jane (?)	18xx-19xx-19xx		43	
P1151613	|===== WRIGHT, Constance (PRINGLE)	18xx-19xx-19xx		43	
P1151613*	|*WRIGHT, ?	18xx-19xx-19xx		43	
P11516131	|===== WRIGHT, ?	19xx- -		43	
P11516132	|===== WRIGHT, ?	19xx- -		43	
P11516133	|===== WRIGHT, ?	19xx- -		43	
P11516134	|===== WRIGHT, ?	19xx- -		43	
P11516135	|===== WRIGHT, ?	19xx- -		43	
P1151614	|===== PRINGLE, John	19xx- -		43	
P115162	|===== PRINGLE, Robert Hatfield	18xx-1xxx-		42	
P115163	|===== PRINGLE, Isabel Edna Emily	18xx-18xx-		42	Died as an infant
P11517	|===== PRINGLE, George Urquhart	18xx-1xxx-		42	
P11518	|===== AYLMER, Mary Christine (PRINGLE)	18xx-1xxx-18xx		42	
P11518*	|*AYLMER, John Athelmer	18xx-1xxx-18xx		42	
P115181	|===== AYLMER, Edith Christine	18xx-1xxx-		42	
P115182	|===== AYLMER, Dorothea	18xx-1xxx-		42	
P11519	|===== PRINGLE, William Rodger McIntyre	18xx-1xxx-		42	
P1151A	|===== PRINGLE, Charlotte Edith	18xx-18xx-		42	Died age 19
P1152	|===== PRINGLE, James Dunbar	1820-1891-1848		42	
P1152*	|*PRINGLE, Mary (FRASER)	182x-1854-1848		42	
P1152+	|+PRINGLE, Phoebe Emma (WILY)	182x-1854-1855		42	
P11521	|===== TIFFANY(*), Gertrude (PRINGLE)	185x-1xxx-18xx		42	
P11521*	|*TIFFANY, Edward H	185x-1xxx-18xx		42	
P115211	|===== TIFFANY, Gertrude	18xx-1xxx-		42	
P115212	|===== TIFFANY, George	18xx-1xxx-		42	
P11522	|===== PRINGLE(+), Arthur Dunbar	18xx-1xxx-18xx		42	
P11522*	|*PRINGLE, Alice Naomi (KINGSMILL)	18xx-1xxx-18xx		42	

Key	Name	Born	Died	Md#1	Brn-Res-Co/Loc	Source	Comments (47 of 61 chars)
P115221	PRINGLE, Julia Dunbar	18xx-	1xxx-			42	
P11523	PRINGLE(+), Robert Anderson	18xx-	1xxx-	18xx		42	
P11523*	*PRINGLE, Mary Robina (BEDELL)	18xx-	1xxx-	18xx		42	
P115231	PRINGLE, Frank Dunbar	18xx-	1xxx-			42	
P115232	PRINGLE, Marjorie	18xx-	1xxx-			42	
P11524	PRINGLE(+), May	18xx-	<'92-			42	
P11525	PRINGLE(+), Margaret Blanche Daisy	18xx-	1xxx-			42	
P1153	WALLACE, Margaret (RUTTAN) (PRINGLE)	1824-	1xxx-	184x		42	
P1153*	*RUTTAN, Henry Jones (PRINGLE)	1824-	1879-	184x		42	
P1153+	+WALLACE, John	182x-	1xxx-	1892		42	
P11531	RUTTAN(*), Henry Norland	18xx-	19xx-	184x		42	
P11531*	*RUTTAN, Andrina (BARERIE)	18xx-	19xx-	184x		42	
P115311	RUTTAN, daughter	186x-	19xx-			42	
P115312	RUTTAN, daughter	186x-	19xx-			42	
P115313	RUTTAN, daughter	186x-	19xx-			42	
P115314	RUTTAN, son	187x-	19xx-			42	
P115315	RUTTAN, son	187x-	19xx-			42	
P115316	RUTTAN, son	187x-	19xx-			42	
P115317	RUTTAN, son	187x-	19xx-			42	
P11532	RUTTAN(*), James Farrand	184x-	1xxx-			42	
P11533	RUTTAN(*), Ann Margaret	184x-	1892-			42	
P11534	RUTTAN(*), Charles Dunbar	184x-	1882-			42	
P11535	RUTTAN(*), Robert Anderson	185x-	1xxx-	18xx		42	
P11535*	*RUTTAN, Ninon (ARMSTRONG)	185x-	1xxx-	18xx		42	
P11536	PONTON(*), Mary Isabella (RUTTAN)	185x-	1xxx-	18xx		42	
P11536*	*PONTON, Douglas	185x-	1xxx-	18xx		42	
P115361	PONTON, James Douglas	187x-	1xxx-			42	
P11537	MCDOUGALL(*), Catherine Corrigal (RUTTAN)	185x-	<'92-	187x		42	No issue
P11537*	*MCDOUGALL, William	185x-	<'92-	187x		42	No issue
P11538	RUTTAN(*), Edith	185x-	<'92-			42	
P11539	RUTTAN(*), Stanley	185x-	1xxx-			42	
P1153A	RUTTAN(*), Isabella May	185x-	1xxx-			42	
P1154	PRINGLE, George	1834-	1xxx-	185x		42	
P1154*	*PRINGLE, Catherine Sophia (FRENCH)	183x-	1xxx-	185x		42	DO Benjamin Gordon French-(SO Albert French)-(S
P11541	TATE, Edith (PRINGLE)	185x-	1xxx-	18xx		42	
P11541*	*TATE, R F	185x-	1xxx-	18xx		42	
P115411	TATE, Edith Maud	187x-	1xxx-			42	
P115412	TATE, Lillian Georgina Hall	187x-	1xxx-			42	
P115413	TATE, Lucia Roberta Beatrix	187x-	1xxx-			42	
P115414	TATE, John Frederick Percy	187x-	1xxx-			42	
P11542	PRINGLE, Leila Gordon	187x-	1xxx-			42	
P11543	PRINGLE, Elsie Small	187x-	1xxx-			42	
P11544	PRINGLE, Harold Dunbar	187x-	1xxx-			42	
P11545	PRINGLE, Edwin (Ted) Corydon	1874-	1953-	1919		43	K11*
P11545*	*PRINGLE, Emma Kathleen (KEWIN)	1889-	1954-	1919		43	K11
P115451	PRINGLE, John Edwin Coryden	1920-	-1947		ONT ONT M9N 2A4	43	Separted 1970
P115451*	*PRINGLE, Diana (SCHWARTZ)	1921-	-1947		ONT	43	Separted 1970. DO Geo Bryant & Constance (Hende
P1154511	PRINGLE, David	1949-	-1979		ONT	43	
P1154511*	*PRINGLE, Saundra (WALSH)	1958-	-1979			43	DO Johne & June (Overbay) Walsh
P11545111	PRINGLE, Janet Elizabeth	1980-	-			43	
P11545112	PRINGLE, Laura Dawn	1983-	-			43	
P11545113	PRINGLE, Robert George	1986-	-			43	
P1154512	PRINGLE, Duncan	1952-	-1974		ONT	43	
P1154512*	*PRINGLE, Nicole (Nicky) (LEBEAU)	1954-	-1974		ONT	43	
P11545121	PRINGLE, Adam Bryant	1976-	-			43	
P11545122	PRINGLE, Jonathan Marc	1980-	-			43	
P11545123	PRINGLE, Suzanne Maryse	1981-	-			43	
P115452	SECORD, Elizabeth (PRINGLE)	1922-	-1947		ONT ONT K2A 2T5	43	
P115452*	*SECORD, Allen	1920-	1981-	1947	ONT	43	Died of cancer. SO Herbert Secord
P1154521	SECORD, John	1949-	-1981		ONT	43	Dvc'd 11/13/88

```
Key --------1-------2-------3-------4-------5-------6-------7-------8-------9-------A-----------------------------------Born-Died-Md#1--Brn-Res-Co/Loc--Source------Comments (47 of 61 chars)----------
P1154521*                                                       !      *SECORD, Helen (WILDERS)                          194x-    -1981  ONT            43         Dvc'd 11/13/88
P1154522                                                        !===== ALEXANDER, Anne (ADAMS) (SECORD)                  1953-    -1978  ONT            43         Dvc'd m#1 '85
P1154522*                                                       !      *ADAMS, Geofl                                     1955-    -1978  ONT            43         Dvc'd 1985
P1154522+                                                       !      +ALEXANDER, Douglas                               1958-    -1987  ONT            43
P11545221                                                               !===== ADAMS(*), Robert                          1980-    -      ONT            43
P11545222                                                               !===== ALEXANDER(*), Myra                        1990-    -      ONT            43
P1154523                                                        !===== BLANEY, Mary (SECORD)                             1955-    -1975  ONT            43
P1154523*                                                       !      *BLANEY, Gary                                     1952-    -1975  ONT            43
P11545231                                                               !===== BLANEY, Diana                             1985-    -      ONT            43
P11545232                                                               !===== BLANEY, Jane                              1987-    -      ONT            43
P11545233                                                               !===== BLANEY, Elliott                           1990-    -      ONT            43
P1154524                                                        !===== SECORD, Diana                                     1958-1976-      ONT            43         Severely handicapped
P115453                                                 !===== RANEY, Gwynneth (PRINGLE)                                 1926-    -1968  ONT ONT N1A 2W6 43
P115453*                                                !      *RANEY, Reg                                               1916-    -19xx  ONT ONT N1A 2W6 43
P1155                                           !===== PRINGLE, infant                                                   186x-186x-                     42         Died in infancy
P1156                                           !===== PRINGLE, infant                                                   186x-186x-                     42         Died in infancy
P1157                                           !===== PRINGLE, infant                                                   186x-186x-                     42         Died in infancy
P1158                                           !===== PRINGLE, infant                                                   186x-186x-                     42         Died in infancy
P1159                                           !===== PRINGLE, infant                                                   186x-186x-                     42         Died in infancy
P116                                    !===== PRINGLE, John                                                             1785-1853-18xx                 42
P116*                                   !      *PRINGLE, ? (WALLACE)                                                     178x-18xx-18xx                 42
P1161                                           !===== STARK, Mary (PRINGLE)                                             18xx-xxxx-18xx                 42
P1161*                                          !      *STARK, ?                                                         18xx-xxxx-18xx                 42
P1162                                           !===== PRINGLE, John                                                     18xx-)'92-                     42
P1163                                           !===== PRINGLE, George                                                   18xx-xxxx-                     42
P1163*                                          !      *PRINGLE, ? (?)                                                   18xx-xxxx-                     42
P1164                                           !===== PRINGLE, Robert                                                   18xx-xxxx-                     42
P1165                                           !===== MANSON, Margaret (PRINGLE)                                        18xx-xxxx-18xx                 42
P1165*                                          !      *MANSON, Rev Mr ?                                                 18xx-xxxx-18xx                 42
P1166                                           !===== ROSE, Grace (PRINGLE)                                             18xx-xxxx-18xx                 42
P1166*                                          !      *ROSE, ?                                                          18xx-xxxx-18xx                 42
P12                                     !===== PRINGLE, James                                                            17xx-17xx-                     42

Key --------1-------2-------3-------4-------5-------6-------7-------8-------9-------A-----------------------------------Born-Died-Md#1--Brn-Res-Co/Loc--Source------Comments (47 of 61 chars)----------
```

```
Key+Ref   1st Gn  2nd Gn  3rd Gn  4th Gn  5th Gn  6th Gn  7th Gn  8th Gn  9th Gn  10th Gn                    Born-Died
----------|-------|-------|-------|-------|-------|-------|-------|-------|-------|-------------------------------------------
          |
J         |===== JELLETT, ?                                                                                   xxxx-xxxx
J*        |      *JELLETT, ? (?)                                                                              xxxx->'73
                 |
J1               |===== JELLETT, Morgan                                                                        xxxx-1881
J1*              |      *JELLETT, Sara ? M (BULL)                                                              1850-1900
                        |
J11                     |===== JELLETT, Morgan                                                                1877-1953
J11*                    |      *JELLETT, Beatrice (BICKFORD)                                                  xxxx-195x
J12                     |===== ILER, Sophia Marguerite (JELLETT)                                              1882-1968
J12*                    |      *ILER, Burritt                                                                 1851-1929
                 |
J2               |===== PLEESE, Kate (JELLETT)                                                                 xxxx-xxxx
J2*              |      *PLEESE, Rev. T.                                                                       xxxx-xxxx
J3               |===== JELLETT, (Judge)                                                                          -
```

```
Key+Ref   1st Gn  2nd Gn  3rd Gn  4th Gn  5th Gn  6th Gn  7th Gn  8th Gn  9th Gn  10th Gn                    Born-Died
-----------|-------|-------|-------|-------|-------|-------|-------|-------|-------|-------------------------------------------
           |
K          |===== BULL, ?                                                                                    xxxx-xxxx
K*         |      *BULL, ? (?)                                                                               xxxx-xxxx
                  |
K1                |===== KEWIN, Emma St John's (BULL)                                                       1854-1925
K1*               |      *KEWIN, Edwin                                                                      1836-1918
                         |
K11                      |===== PRINGLE, Emma Kathleen (KEWIN)                                              1889-1954
K11*                     |      *PRINGLE, Edwin (Ted) Corydon                                               1874-1953
K12                      |===== KEWIN, George                                                               1893-19xx
K12*                     |      *KEWIN, Dorothy (DUNSTAN)                                                   1885-1966
                                |
K121                            |===== MATTHEWS, Gwynneth (KEWIN)                                            1926-
K121*                           |      *MATTHEWS, James                                                      192x-
                                       |
K1211                                  |===== MATTHEWS, James Edwin                                         194x-
K1211*                                 |      *MATTHEWS, Heidi (?)                                          194x-
K1212                                  |===== GOERTZEN, Judith Anne (MATTHEWS)                              195x-
K1212*                                 |      *GOERTZEN, Randall                                            195x-
                                |
K122                            |===== KEWIN, Kenneth                                                        1927-
K122*                           |      *KEWIN, Maxine (GRANT)                                                192x-
K123                            |===== WARREN, Daphne (KEWIN)                                                1935-
K123*                           |      *WARREN, ?                                                            193x-
                                       |
K1231                                  |===== WARREN, Kenneth                                               196x-
K1231*                                 |      *WARREN, Sally (MCCANN)                                       196x-
                                              |
K12311                                        |===== WARREN, Jeffrey                                         1984-
K12312                                        |===== WARREN, Kyle                                            1989-
                                       |
K1232                                  |===== WARREN, Stephen                                               195x-
                         |
K13                      |===== KEWIN, Muriel Elaine                                                        1887-1896
                  |
K2                |===== JELLETT, Sara S M (BULL)                                                           1850-1900
K2*               |      *JELLETT, Morgan                                                                   xxxx-1881
K3                |===== KELLY, Lucy Jellett (BULL)                                                         xxxx-xxxx
K3*               |      *KELLY, ?                                                                          xxxx-xxxx
                         |
K31                      |===== BALLANTINE, Gretchen (KELLY)                                                xxxx-xxxx
K31*                     |      *BALLANTINE, Dr. ?                                                          xxxx-xxxx
```

```
Key+Ref   1st Gn  2nd Gn  3rd Gn  4th Gn  5th Gn  6th Gn  7th Gn  8th Gn  9th Gn  10th Gn                                  Born-Died
----------|-------|-------|-------|-------|-------|-------|-------|-------|-------|-----------------------------------------
          |
M         |===== MACDONELL, John                                                                                          17xx-18xx
M*        |      *MACDONELL, Jane (CHISHOLM)                                                                              17xx-18xx
          |
M1        |===== MACDONELL, Archibald                                                                                     17xx-1xxx
M1*       |      *MACDONELL, ? (FRASER)                                                                                   17xx-1xxx
          |
M11       |===== MACDONELL, John                                                                                          17xx-1xxx
M12       |===== MACDONELL, James (Capt)                                                                                  17xx-1xxx
M13       |===== MACDONELL, Mary (MACDONELL)                                                                              17xx-1xxx
M13*      |      *MACDONELL, Donald Aeneas                                                                                17xx-1xxx
M14       |===== MACDONELL, Harriet (MACDONELL)                                                                           17xx-1xxx
M14*      |      *MACDONELL, Duncan (Col)                                                                                 17xx-1xxx
M15       |===== TREADWELL, Ellen (MACDONELL)                                                                             17xx-1xxx
M15*      |      *TREADWELL, Charles P                                                                                    17xx-1xxx
M16       |===== FRASER, Anne (MACDONELL)                                                                                 17xx-1xxx
M16*      |      *FRASER, Alexander (Col)                                                                                 17xx-1xxx
M17       |===== MCCANN, Madeline (MACDONELL)                                                                             17xx-1xxx
M17*      |      *MCCANN, ?                                                                                               17xx-1xxx
M18       |===== MACDONELL, son/daughter                                                                                  17xx-1xxx
          |
M2        |===== MACDONELL, Allan (Capt Lt)                                                                               17xx-1xxx
M2*       |      *MACDONELL, ? (MACDONALD)                                                                                17xx-1xxx
M2+       |      +MACDONELL, ? (MACDONELL)                                                                                17xx-1xxx
          |
M21       |===== MACDONELL, James                                                                                         17xx-1xxx
M22       |===== MACDONELL, John                                                                                          17xx-1xxx
M23       |===== SCOTT, ? (MACDONELL)                                                                                     17xx-1xxx
M23*      |      *SCOTT, William J (Dr)                                                                                   17xx-1xxx
M24       |===== FRASER, ? (MACDONELL)                                                                                    17xx-1xxx
M24*      |      *FRASER, Simon                                                                                           17xx-1xxx
M25       |===== GRANT, ? (MACDONELL)                                                                                     17xx-1xxx
M25*      |      *GRANT, ?                                                                                                17xx-1xxx
M26       |===== FRASER, Mary (MACDONELL)                                                                                 17xx-1xxx
M26*      |      *FRASER, Richard Duncan (Col)                                                                            17xx-1xxx
M27       |===== MCDONELL, Isabella (MACDONELL)                                                                           17xx-1xxx
M27*      |      *MCDONELL, Angus                                                                                         17xx-1xxx
          |
M3        |===== MACDONELL, Alexander                                                                                     17xx-1xxx
M3*       |      *MACDONELL, ? (GRANT)                                                                                    17xx-1xxx
          |
M31       |===== MACDONELL, Archy                                                                                         17xx-1xxx
M32       |===== CHISHOLM, ? (MACDONELL)                                                                                  17xx-1xxx
M32*      |      *CHISHOLM, C (Col)                                                                                       17xx-1xxx
M33       |===== MACDONELL, John                                                                                          17xx-1xxx
          |
M4        |===== MACDONELL, Ranald (Reginald?)                                                                            17xx-1xxx
M4*       |      *MACDONELL, ? (ROBERTSON)                                                                                17xx-1xxx
          |
M41       |===== MACDONELL, Donald                                                                                        17xx-1xxx
M41*      |      *MACDONELL, ? (?)                                                                                        17xx-1xxx
          |
M411      |===== MACDONELL, son                                                                                           17xx-1xxx
M412      |===== MACDONELL, Alister                                                                                       17xx-1xxx
          |
M42       |===== BLACKLOCK, ? (MACDONELL)                                                                                 17xx-1xxx
M42*      |      *BLACKLOCK, Ambrose                                                                                      17xx-1xxx
M43       |===== WALKER, ? (MACDONELL)                                                                                    17xx-1xxx
M43*      |      *WALKER, ?                                                                                               17xx-1xxx
          |
M5        |===== MACDONELL, Roderick                                                                                      17xx-1xxx
M6        |===== MCLEOD, Catherine (MACDONELL)                                                                            17xx-1xxx
M6*       |      *MCLEOD, William                                                                                         17xx-1xxx
M7        |===== MACDONALD, Harriet (MACDONELL)                                                                           17xx-1xxx
M7*       |      *MACDONALD, ?                                                                                            17xx-1xxx
M8        |===== FRASER, Mary (MACDONELL)                                                                                 17xx-1xxx
M8*       |      *FRASER, Thomas (Col)                                                                                    17xx-1xxx
M9        |===== MCLEAN, Isabella (MACDONELL)                                                                             17xx-1xxx
M9*       |      *MCLEAN, Neil (Col)                                                                                      17xx-1xxx
          |
M91       |===== MCLEAN, Archibald                                                                                        17xx-1xxx
M92       |===== MCLEAN, Alexander                                                                                        17xx-1xxx
M93       |===== MCLEAN, John                                                                                             17xx-1xxx
M94       |===== FRASER, ? (MCLEAN)                                                                                       17xx-1xxx
M94*      |      *FRASER, ?                                                                                               17xx-1xxx
M95       |===== HOPPER, ? (MACDONELL)                                                                                    17xx-1xxx
M95*      |      *HOPPER, ?                                                                                               17xx-1xxx
M96       |===== MCGILLIVRAY, ? (MACDONELL)                                                                               17xx-1xxx
M96*      |      *MCGILLIVRAY, ?                                                                                          17xx-1xxx
M97       |===== TREW, ? (MACDONELL)                                                                                      17xx-1xxx
M97*      |      *TREW, ?                                                                                                 17xx-1xxx
M98       |===== MACDONELL, Jessie                                                                                        17xx-1xxx
```

03-01-1991 - 07:15:24 Family "Tree" Listing KBASE

```
Key+Ref   1st Gn  2nd Gn  3rd Gn  4th Gn  5th Gn  6th Gn  7th Gn  8th Gn  9th Gn  10th Gn                                  Born-Died
-----------|-------|-------|-------|-------|-------|-------|-------|-------|-------|-------------------------------------------------
           |
P          |===== PRINGLE, ?                                                                                                 16xx-xxxx
P*         |      *PRINGLE, ? (?)                                                                                            16xx-xxxx
                  |
P1                |===== PRINGLE, Robert                                                                                      16xx-xxxx
P1*               |      *PRINGLE, Jean (GODDERAR)                                                                            16xx-xxxx
                         |
P11                      |===== PRINGLE, Dunbar                                                                              17xx-1791
P11*                     |      *PRINGLE, Margaret (COWAN)                                                                   17xx-1791
                               |
P111                           |===== PRINGLE, Robert Abercrombie                                                              1775-18xx
P111*                          |      *PRINGLE, ? (?)                                                                          177x-1xxx
P111+                          |      +PRINGLE, ? (?)                                                                          177x-1840
P112                           |===== FULLJAMES, Margaret (PRINGLE)                                                            1777-1820
P112*                          |      *FULLJAMES, Trophimus                                                                    177x-18xx
                                      |
P1121                                 |===== FULLJAMES, Thomas                                                                18xx-18xx
P1122                                 |===== FULLJAMES, Robert                                                                18xx-18xx
P1123                                 |===== FULLJAMES, John Pringle                                                          18xx-18xx
P1124                                 |===== FULLJAMES, son                                                                   18xx-<'92
P1125                                 |===== FULLJAMES, daughter                                                              18xx-18xx
P1126                                 |===== FULLJAMES, daughter                                                              18xx-18xx
P1127                                 |===== BALFOUR, Margaret (FULLJAMES)                                                    18xx-<'92
P1127*                                |      *BALFOUR, Capt                                                                   18xx-18xx
                               |
P113                           |===== PRINGLE, George                                                                          1778-1834
P113*                          |      *PRINGLE, ? (?)                                                                          177x-18xx
P114                           |===== PRINGLE, Dunbar                                                                          1782-1805
P115                           |===== PRINGLE, James                                                                           1784-1860
P115*                          |      *PRINGLE, Anne Margaret (ANDERSON)                                                       1796-1870
                                      |
P1151                                 |===== PRINGLE, Jacob Farrand                                                           1816->'92
P1151*                                |      *PRINGLE, Isabella (FRASER)                                                      181x-18xx
                                             |
P11511                                       |===== CORBETT, Anne (MOREN) (PRINGLE)                                            186x-1xxx
P11511*                                      |      *MOREN, Arthur                                                             18xx-1883
P11511+                                      |      +CORBETT, Frederick D                                                      18xx-1xxx
                                                     |
P115111                                              |===== MOREN(*), son                                                      18xx-18xx
P115112                                              |===== MOREN(*), Arthur Fraser Stirling                                   18xx-18xx
P115112*                                             |      *MOREN, Johanna Rubidge (HAZEN)                                    18xx-18xx
                                             |
P11512                                       |===== HALL, Margaret (PRINGLE)                                                   18xx-1xxx
P11512*                                      |      *HALL, Francis J                                                           18xx-<'92
                                                     |
P115121                                              |===== HALL, Geo Russell                                                  18xx-1xxx
P115122                                              |===== HALL, James                                                        18xx-1xxx
P115123                                              |===== HALL, Harry Leslie                                                 18xx-1xxx
P115124                                              |===== HALL, Farrand                                                      18xx-1xxx
                                             |
P11513                                       |===== RITCHIE, Isabella (PRINGLE)                                                18xx-1xxx
P11513*                                      |      *RITCHIE, Thomas                                                           18xx-1xxx
                                                     |
P115131                                              |===== RITCHIE, Thomas Fraser                                             18xx-1xxx
P115132                                              |===== RITCHIE, John William Pringle                                      18xx-1xxx
P115133                                              |===== RITCHIE, Lewis Farrand                                             18xx-1xxx
P115134                                              |===== RITCHIE, Mary Christine                                            18xx-1xxx
P115135                                              |===== RITCHIE, Beatrice Lichtenstein                                     18xx-1xxx
P115136                                              |===== RITCHIE, Edith Isabella                                            18xx-1xxx
P115137                                              |===== RITCHIE, Ella Almon                                                18xx-1xxx
                                             |
P11514                                       |===== PRINGLE, James Farrand                                                     18xx-1xxx
P11515                                       |===== PRINGLE, Alexander Fraser                                                  18xx-1xxx
P11515*                                      |      *PRINGLE, Clara (ALLEN)                                                    18xx-1xxx
P11516                                       |===== PRINGLE, Robert Abercrombie                                                18xx-1xxx
P11516*                                      |      *PRINGLE, Emma Ada (VANARSDALE)                                            18xx-1xxx
                                                     |
P115161                                              |===== PRINGLE, James Farrand                                             1876-1xxx
P115161*                                             |      *PRINGLE, Mildred (?)                                              18xx-1959
                                                            |
P1151611                                                    |===== PRINGLE, Win                                               18xx-197x
P1151612                                                    |===== PRINGLE, James F                                           18xx-1987
P1151612*                                                   |      *PRINGLE, W Jane (?)                                       18xx-19xx
P1151613                                                    |===== WRIGHT, Constance (PRINGLE)                                18xx-19xx
P1151613*                                                   |      *WRIGHT, ?                                                 18xx-19xx
                                                                   |
P11516131                                                          |===== WRIGHT, ?                                          19xx-
P11516132                                                          |===== WRIGHT, ?                                          19xx-
P11516133                                                          |===== WRIGHT, ?                                          19xx-
P11516134                                                          |===== WRIGHT, ?                                          19xx-
P11516135                                                          |===== WRIGHT, ?                                          19xx-
```

```
P1151614                                        |===== PRINGLE, John                                  19xx-
                                                |
P115162                                         |===== PRINGLE, Robert Hatfield                       18xx-1xxx
P115163                                         |===== PRINGLE, Isabel Edna Emily                     18xx-18xx
                                        |
P11517                                  |===== PRINGLE, George Urquhart                             18xx-1xxx
P11518                                  |===== AYLMER, Mary Christine (PRINGLE)                     18xx-1xxx
P11518*                                 |      *AYLMER, John Athelmer                               18xx-1xxx
                                                |
P115181                                         |===== AYLMER, Edith Christine                      18xx-1xxx
P115182                                         |===== AYLMER, Dorothea                             18xx-1xxx
                                        |
P11519                                  |===== PRINGLE, William Rodger McIntyre                     18xx-1xxx
P1151A                                  |===== PRINGLE, Charlotte Edith                             18xx-18xx
                                |
P1152                           |===== PRINGLE, James Dunbar                                        1820-1891
P1152*                          |      *PRINGLE, Mary (FRASER)                                      182x-1854
P1152+                          |      +PRINGLE, Phoebe Emma (WILY)                                 182x-1854
                                        |
P11521                                  |===== TIFFANY(*), Gertrude (PRINGLE)                       185x-1xxx
P11521*                                 |      *TIFFANY, Edward H                                   185x-1xxx
                                                |
P115211                                         |===== TIFFANY, Gertrude                            18xx-1xxx
P115212                                         |===== TIFFANY, George                              18xx-1xxx
                                        |
P11522                                  |===== PRINGLE(+), Arthur Dunbar                            18xx-1xxx
P11522*                                 |      *PRINGLE, Alice Naomi (KINGSMILL)                    18xx-1xxx
                                                |
P115221                                         |===== PRINGLE, Julia Dunbar                        18xx-1xxx
                                        |
P11523                                  |===== PRINGLE(+), Robert Anderson                          18xx-1xxx
P11523*                                 |      *PRINGLE, Mary Robina (BEDELL)                       18xx-1xxx
                                                |
P115231                                         |===== PRINGLE, Frank Dunbar                        18xx-1xxx
P115232                                         |===== PRINGLE, Marjorie                            18xx-1xxx
                                        |
P11524                                  |===== PRINGLE(+), May                                      18xx-<'92
P11525                                  |===== PRINGLE(+), Margaret Blanche Daisy                   18xx-1xxx
                                |
P1153                           |===== WALLACE, Margaret (RUTTAN) (PRINGLE)                         1824-1xxx
P1153*                          |      *RUTTAN, Henry Jones (PRINGLE)                               1824-1879
P1153+                          |      +WALLACE, John                                               182x-1xxx
                                        |
P11531                                  |===== RUTTAN(*), Henry Norland                             18xx-19xx
P11531*                                 |      *RUTTAN, Andrina (BARERIE)                           18xx-19xx
                                                |
P115311                                         |===== RUTTAN, daughter                             186x-19xx
P115312                                         |===== RUTTAN, daughter                             186x-19xx
P115313                                         |===== RUTTAN, daughter                             186x-19xx
P115314                                         |===== RUTTAN, son                                  187x-19xx
P115315                                         |===== RUTTAN, son                                  187x-19xx
P115316                                         |===== RUTTAN, son                                  187x-19xx
P115317                                         |===== RUTTAN, son                                  187x-19xx
                                        |
P11532                                  |===== RUTTAN(*), James Farrand                             184x-1xxx
P11533                                  |===== RUTTAN(*), Ann Margaret                              184x-1892
P11534                                  |===== RUTTAN(*), Charles Dunbar                            184x-1882
P11535                                  |===== RUTTAN(*), Robert Anderson                           185x-1xxx
P11535*                                 |      *RUTTAN, Ninon (ARMSTRONG)                           185x-1xxx
P11536                                  |===== PONTON(*), Mary Isabella (RUTTAN)                    185x-1xxx
P11536*                                 |      *PONTON, Douglas                                     185x-1xxx
                                                |
P115361                                         |===== PONTON, James Douglas                        187x-1xxx
                                        |
P11537                                  |===== MCDOUGALL(*), Catherine Corrigal (RUTTAN)            185x-<'92
P11537*                                 |      *MCDOUGALL, William                                  185x-<'92
P11538                                  |===== RUTTAN(*), Edith                                     185x-<'92
P11539                                  |===== RUTTAN(*), Stanley                                   185x-1xxx
P1153A                                  |===== RUTTAN(*), Isabella May                              185x-1xxx
                                |
P1154                           |===== PRINGLE, George                                              1834-1xxx
P1154*                          |      *PRINGLE, Catherine Sophia (FRENCH)                          183x-1xxx
                                        |
P11541                                  |===== TATE, Edith (PRINGLE)                                185x-1xxx
P11541*                                 |      *TATE, R F                                           185x-1xxx
                                                |
P115411                                         |===== TATE, Edith Maud                             187x-1xxx
P115412                                         |===== TATE, Lillian Georgina Hall                  187x-1xxx
P115413                                         |===== TATE, Lucia Roberta Beatrix                  187x-1xxx
P115414                                         |===== TATE, John Frederick Percy                   187x-1xxx
                                        |
P11542                                  |===== PRINGLE, Leila Gordon                                187x-1xxx
P11543                                  |===== PRINGLE, Elsie Small                                 187x-1xxx
P11544                                  |===== PRINGLE, Harold Dunbar                               187x-1xxx
P11545                                  |===== PRINGLE, Edwin (Ted) Corydon                         1874-1953
P11545*                                 |      *PRINGLE, Emma Kathleen (KEWIN)                      1889-1954
                                                |
```

```
P115451                                  |===== PRINGLE, John Edwin Coryden                                1920-
P115451*                                 |      *PRINGLE, Diana (SCHWARTZ)                                 1921-
                                                |
P1154511                                        |===== PRINGLE, David                                     1949-
P1154511*                                       |      *PRINGLE, Saundra (WALSH)                          1958-
                                                        |
P11545111                                               |===== PRINGLE, Janet Elizabeth                   1980-
P11545112                                               |===== PRINGLE, Laura Dawn                        1983-
P11545113                                               |===== PRINGLE, Robert George                     1986-
                                                |
P1154512                                        |===== PRINGLE, Duncan                                    1952-
P1154512*                                       |      *PRINGLE, Nicole (Nicky) (LEBEAU)                  1954-
                                                        |
P11545121                                               |===== PRINGLE, Adam Bryant                       1976-
P11545122                                               |===== PRINGLE, Jonathan Marc                     1980-
P11545123                                               |===== PRINGLE, Suzanne Maryse                    1981-
                                         |
P115452                                  |===== SECORD, Elizabeth (PRINGLE)                                1922-
P115452*                                 |      *SECORD, Allen                                             1920-1981
                                                |
P1154521                                        |===== SECORD, John                                       1949-
P1154521*                                       |      *SECORD, Helen (WILDERS)                           194x-
P1154522                                        |===== ALEXANDER, Anne (ADAMS) (SECORD)                   1953-
P1154522*                                       |      *ADAMS, Geofl                                      1955-
P1154522+                                       |      +ALEXANDER, Douglas                                1958-
                                                        |
P11545221                                               |===== ADAMS(*), Robert                           1980-
P11545222                                               |===== ALEXANDER(*), Myra                         1990-
                                                |
P1154523                                        |===== BLANEY, Mary (SECORD)                              1955-
P1154523*                                       |      *BLANEY, Gary                                      1952-
                                                        |
P11545231                                               |===== BLANEY, Diana                              1985-
P11545232                                               |===== BLANEY, Jane                               1987-
P11545233                                               |===== BLANEY, Elliott                            1990-
                                                |
P1154524                                        |===== SECORD, Diana                                      1958-1976
                                         |
P115453                                  |===== RANEY, Gwynneth (PRINGLE)                                  1926-
P115453*                                 |      *RANEY, Reg                                                1916-
                                 |
P1155                            |===== PRINGLE, infant                                                    186x-186x
P1156                            |===== PRINGLE, infant                                                    186x-186x
P1157                            |===== PRINGLE, infant                                                    186x-186x
P1158                            |===== PRINGLE, infant                                                    186x-186x
P1159                            |===== PRINGLE, infant                                                    186x-186x
                         |
P116                     |===== PRINGLE, John                                                              1785-1853
P116*                    |      *PRINGLE, ? (WALLACE)                                                      178x-18xx
                                 |
P1161                            |===== STARK, Mary (PRINGLE)                                              18xx-xxxx
P1161*                           |      *STARK, ?                                                          18xx-xxxx
P1162                            |===== PRINGLE, John                                                      18xx->'92
P1163                            |===== PRINGLE, George                                                    18xx-xxxx
P1163*                           |      *PRINGLE, ? (?)                                                    18xx-xxxx
P1164                            |===== PRINGLE, Robert                                                    18xx-xxxx
P1165                            |===== MANSON, Margaret (PRINGLE)                                         18xx-xxxx
P1165*                           |      *MANSON, Rev Mr ?                                                  18xx-xxxx
P1166                            |===== ROSE, Grace (PRINGLE)                                              18xx-xxxx
P1166*                           |      *ROSE, ?                                                           18xx-xxxx
                 |
P12              |===== PRINGLE, James                                                                     17xx-17xx
```

```
Key+Ref   1st Gn  2nd Gn  3rd Gn  4th Gn  5th Gn  6th Gn  7th Gn  8th Gn  9th Gn  10th Gn                    Born-Died
----------|-------|-------|-------|-------|-------|-------|-------|-------|-------|-------------------------------------------
          |
L         |===== PREVOST, ?                                                                                   16xx-1xxx
L*        |      *PREVOST, ? (?)                                                                              16xx-1xxx
           |
L1         |===== LOW, ? (PREVOST)                                                                            17xx-17xx
L1*        |      *LOW, ?                                                                                     17xx-17xx
            |
L11         |===== FRANKLIN, ? (LOW)                                                                          17xx-1xxx
L11*        |      *FRANKLIN, ? (Col)                                                                         17xx-1xxx
L12         |===== VANRANSELLAR, ? (LOW)                                                                      17xx-1xxx
L12*        |      *VANRANSELLAR, ?                                                                           17xx-1xxx
L13         |===== HEDDEND, Margaret (FARRAND) (LOW)                                                          17xx-17xx
L13*        |      *FARRAND, ? (Dr)                                                                           17xx-1764
L13+        |      +HEDDEN, Elijah                                                                            17xx-18xx
             |
L131          |===== FARRAND(*), Jacob                                                                        17xx-1803
L132          |===== VALENTINE(*), Catherine (FARRAND)                                                        1756-18xx
L132*         |      *VALENTINE, John                                                                         175x-18xx
L133          |===== ANDERSON(*), Johanna (FARRAND)                                                           1759-18xx
L133*         |      *ANDERSON, Joseph                                                                        175x-18xx
L134          |===== ANDERSON(*), John                                                                        1754-1xxx
L135          |===== ANDERSON(*), Jacob                                                                       1763-1xxx
L136          |===== HEDDEN(+), son/daughter?                                                                 176x-1xxx
L137          |===== HEDDEN(+), son/daughter?                                                                 176x-1xxx
L138          |===== HEDDEN(+), son/daughter?                                                                 177x-1xxx
L139          |===== HEDDEN(+), son/daughter?                                                                 177x-1xxx
```

03-01-1991 - 07:20:19 Family "Tree" Listing KBASE

```
Key+Ref   1st Gn  2nd Gn  3rd Gn  4th Gn  5th Gn  6th Gn  7th Gn  8th Gn  9th Gn  10th Gn                                  Born-Died
-----------|-------|-------|-------|-------|-------|-------|-------|-------|-------|-------------------------------------------
           |
0          |===== OGLIVY, Walter (Sir)                                                                                  13xx-1392
0*         |      *OGLIVY, ? (?)                                                                                        13xx-1392
                  |
01                |===== OGLIVY, ? (Lord)                                                                              13xx-1411
02                |===== OGLIVY, Walter (Sir)                                                                          13xx-14xx
02*               |      *OGLIVY, Isabel (deDURWARD)                                                                   13xx-14xx
                         |
021                      |===== OGLIVY, John (Sir)                                                                    14xx-14xx
022                      |===== OGLIVY, Walter (Sir)                                                                  14xx-14xx
022*                     |      *OGLIVY, ? (SINCLAIR)                                                                 14xx-14xx
022+                     |      +OGLIVY, Mary (Lady) (DOUGLAS)                                                        14xx-14xx
                                |
0221                            |===== OGLIVY, James (Lord)                                                            1xxx-1xxx
0221*                           |      *OGLIVY, ? (?)                                                                  1xxx-1xxx
                                      |
02211                                 |===== OGLIVY, Walter                                                            1xxx-1xxx
02212                                 |===== OGLIVY, James                                                             1xxx-1xxx
02213                                 |===== OGLIVY, Patrick (Col)                                                     1xxx-1xxx
02213*                                |      *OGLIVY, Elizabbeth (ABERCROMBIE)  (BAIRD)                                1xxx-1xxx
                                            |
022131                                      |===== FRASER, Anne (OGLIVY)                                                1xxx-1xxx
022131*                                     |      *FRASER, John                                                        1xxx-1xxx
                                                  |
0221311                                           |===== WILSON, ? (FRASER)                                           1xxx-1xxx
0221311*                                          |      *WILSON, ?                                                   1xxx-1xxx
0221312                                           |===== COWAN, ?                                                     1xxx-1xxx
0221312*                                          |      *COWAN, ?                                                    1xxx-1xxx
                                                         |
02213121                                                 |===== PRINGLE, Margaret (COWAN)                                1xxx-1xxx
02213121*                                                |      *PRINGLE, Dunbar                                         1xxx-1xxx
                                                  |
0221313                                           |===== FOREST, ? (FRASER)                                           1xxx-1xxx
0221313*                                          |      *FOREST, ?                                                   1xxx-1xxx
0221314                                           |===== FRASER, John                                                 1xxx-1xxx
0221315                                           |===== FRASER, James                                                1xxx-1xxx
0221316                                           |===== FRASER, Elizabeth                                            1xxx-1xxx
```

```
Key+Ref   1st Gn  2nd Gn  3rd Gn  4th Gn  5th Gn  6th Gn  7th Gn  8th Gn  9th Gn  10th Gn                    Born-Died
----------|-------|-------|-------|-------|-------|-------|-------|-------|-------|-------------------------------------
          |
B         |===== ABERCROMBIE, Alexander (Sir)                                                                xxxx-xxxx
B*        |      *ABERCROMBIE, Elizabeth (BAIRD)                                                             xxxx-xxxx
           |
B1         |===== ABERCROMBIE(*), James (Sir)                                                                xxxx-xxxx
B2         |===== ABERCROMBIE(*), Alexander                                                                  xxxx-xxxx
B2*        |      *ABERCROMBIE, ? (?)                                                                        xxxx-xxxx
            |
B21         |===== ABERCROMBIE, George                                                                       xxxx-xxxx
B21*        |      *ABERCROMBIE, ? (?)                                                                       xxxx-xxxx
             |
B211          |===== ABERCROMBIE, Ralph (Genl Sir)                                                           xxxx-1801
           |
B3         |===== CARGILL(*), Anne (ABERCROMBIE)                                                             17xx-18xx
B3*        |      *CARGILL, Thomas                                                                           17xx-18xx
            |
B31         |===== CARGILL, son                                                                              18xx-18xx
B32         |===== CARGILL, Elizabeth                                                                        18xx-18xx
B33         |===== ?, Anne (CARGILL)                                                                         18xx-18xx
B33*        |      *?, ? (Prof)                                                                              18xx-18xx
             |
B331          |===== ?, son                                                                                  18xx-18xx
            |
B34         |===== GODDERAR, ? (CARGILL)                                                                     18xx-18xx
             |
B341          |===== ROBERTSON, Mary (GODDERAR)                                                              18xx-18xx
B341*         |      *ROBERTSON, John                                                                        18xx-18xx
B342          |===== PRINGLE, Jean (GODDERAR)                                                                18xx-18xx
B342*         |      *PRINGLE, Robert                                                                        18xx-18xx
```

```
Key+Ref   1st Gn  2nd Gn  3rd Gn  4th Gn  5th Gn  6th Gn  7th Gn  8th Gn  9th Gn  10th Gn                    Born-Died
----------|-------|-------|-------|-------|-------|-------|-------|-------|-------|-------------------------------------
          |
A         |===== ANDERSON, Benjamin                                                                          1699-1792
A*        |      *ANDERSON, Hannah (WILSON)                                                                  1709-1793
           |
A1         |===== ANDERSON, Samuel                                                                           1736-1836
A1*        |      *ANDERSON, Deliverance (BUTTS)                                                              1743-1824
                  |
A11               |===== ANDERSON, Joseph                                                                    1763-1853
A11*              |      *ANDERSON, Johanna (FARRAND)                                                        176x-18xx
                         |
A111                     |===== ANDERSON, Robrt Isaac Dey Gray                                              1792-1874
A112                     |===== PRINGLE, Anne Margaret (ANDERSON)                                           1796-1870
A112*                    |      *PRINGLE, James                                                             1784-1860
A113                     |===== CLOWES, Delia (ANDERSON)                                                    1800-1882
A113*                    |      *CLOWES, James                                                              180x-18xx
                                 |
A1131                            |===== HILLS, Johanna (CLOWES)                                             18xx-18xx
A1131*                           |      *HILLS, Benjamin                                                    18xx-18xx
A1132                            |===== SHEARER, Mary (CLOWES)                                              18xx-<'92
A1132*                           |      *SHEARER, James                                                     18xx-18xx
                                          |
A11321                                    |===== SHEARER, son/daughter?                                      18xx-1xxx
A11322                                    |===== SHEARER, son/daughter?                                      18xx-1xxx
                                 |
A1133                            |===== SHEARER, Samuel                                                     18xx-1xxx
                  |
A12               |===== ANDERSON, Ebenezer                                                                  176x-<'24
A13               |===== ANDERSON, James                                                                     176x-18xx
A13*              |      *ANDERSON, ? (?)                                                                    176x-18xx
                         |
A131                     |===== ANDERSON, ?                                                                 179x-
                  |
A14               |===== ANDERSON, Cyrus                                                                     177x-<'24
A15               |===== ANDERSON, Thomas Gummersal                                                          1779-1875
A16               |===== ANDERSON, George                                                                    17xx-xxxx
A16*              |      *ANDERSON, ? (?)                                                                    17xx-xxxx
                         |
A161                     |===== ANDERSON, Thos G                                                            18xx-xxxx
                  |
A17               |===== MCKAY, Anne (Nancy) (ANDERSON)                                                      17xx-18xx
A17*              |      *MCKAY, Lawrence                                                                    17xx-18xx
                |
A2              |===== ANDERSON, son/daughter?                                                               173x-1xxx
A3              |===== ANDERSON, son/daughter?                                                               173x-1xxx
A4              |===== ANDERSON, son/daughter?                                                               174x-1xxx
A5              |===== ANDERSON, son/daughter?                                                               174x-1xxx
A6              |===== ANDERSON, son/daughter?                                                               174x-1xxx
A7              |===== ANDERSON, son/daughter?                                                               174x-1xxx
A8              |===== ANDERSON, son/daughter?                                                               174x-1xxx
A9              |===== ANDERSON, son/daughter?                                                               174x-1xxx
```

March 1, 1991 at 7:41 a.m.

Key	Surname	Gi
L	PREVOST	?
L*	PREVOST	?
L1	LOW	?
L1*	LOW	?
L11	FRANKLIN	?
L11*	FRANKLIN	?
L12	VANRANSELLAR	?
L12*	VANRANSELLAR	?
L13	HEDDEND	Ma
L13*	FARRAND	?
L13+	HEDDEN	El
L131	FARRAND	Ja
L132	VALENTINE	Ca
L132*	VALENTINE	Jo
L133	ANDERSON	Jo
L133*	ANDERSON	Jo
L134	ANDERSON	Jo
L135	ANDERSON	Ja
L136	HEDDEN	so
L137	HEDDEN	so
L138	HEDDEN	so
L139	HEDDEN	so

22 records.

Key	Surname	Given Names	Nee	G	B-Yr	MoDy	S	CtryS/P	City Born	D-Yr	MoDy	CtryS/P	City Died	Md#1	MoDy	T	Md#2	MoDy	T	Mail Addr#1	Mail City	Comments	Ref
L	PREVOST	?		M	16xx	xxxx				1xxx	xxxx			1xxx	xxxx								42
L*	PREVOST	?	?	F	16xx	xxxx				1xxx	xxxx			1xxx	xxxx								42
L1	LOW	?	PREVOST	F	17xx	xxxx				17xx	xxxx			17xx	xxxx								42
L1*	LOW	?		M	17xx	xxxx				17xx	xxxx			17xx	xxxx								
L11	FRANKLIN	?	LOW	F	17xx	xxxx				1xxx	xxxx			17xx	xxxx								42
L11*	FRANKLIN	? (Col)		M	17xx	xxxx				1xxx	xxxx			17xx	xxxx								42
L12	VANRANSELLAR	?	LOW	F	17xx	xxxx				1xxx	xxxx			17xx	xxxx								42
L12*	VANRANSELLAR	?		M	17xx	xxxx				1xxx	xxxx			17xx	xxxx								42
L13	HEDDEND	Margaret (FARRAND)	LOW	F	17xx	xxxx				17xx	xxxx			1752	xxxx								42
L13*	FARRAND	? (Dr)		M	17xx	xxxx				1764	xxxx			1752	xxxx								42
L13+	HEDDEN	Elijah		M	17xx	xxxx				18xx	xxxx			>'64	xxxx								42
L131	FARRAND	Jacob		M	17xx	xxxx	*			1803	xxxx												42
L132	VALENTINE	Catherine	FARRAND	F	1756	0504	*			18xx	xxxx			178x	xxxx							Md 1784/5?	42
L132*	VALENTINE	John		M	175x	xxxx				18xx	xxxx			178x	xxxx							*d 1784/5?	42
L133	ANDERSON	Johanna	FARRAND	F	1759	06xx	*			18xx	xxxx			178x	xxxx							Md 1784/5? - A11*	42
L133*	ANDERSON	Joseph		M	175x	xxxx				18xx	xxxx			178x	xxxx							Md 1784/5? - A11	42
L134	ANDERSON	John		M	1754	0815	*			1xxx	xxxx												42
L135	ANDERSON	Jacob		M	1763	1106	*			1xxx	xxxx												42
L136	HEDDEN	son/daughter?		?	176x	xxxx	+			1xxx	xxxx												42
L137	HEDDEN	son/daughter?		?	176x	xxxx	+			1xxx	xxxx												42
L138	HEDDEN	son/daughter?		?	177x	xxxx	+			1xxx	xxxx												42
L139	HEDDEN	son/daughter?		?	177x	xxxx	+			1xxx	xxxx												42

22 records.

March 1, 1991 at 7:41 a.m.

Key	Surname	Gi	..
L	PREVOST	?	
L*	PREVOST	?	
L1	LOW	?	
L1*	LOW	?	
L11	FRANKLIN	?	
L11*	FRANKLIN	?	
L12	VANRANSELLAR	?	
L12*	VANRANSELLAR	?	
L13	HEDDEND	Ma	
L13*	FARRAND	?	
L13+	HEDDEN	El	m
L131	FARRAND	Ja	
L132	VALENTINE	Ca	
L132*	VALENTINE	Jo	
L133	ANDERSON	Jo	na
L133*	ANDERSON	Jo	
L134	ANDERSON	Jo	
L135	ANDERSON	Ja	
L136	HEDDEN	so	aug
L137	HEDDEN	so	
L138	HEDDEN	so	
L139	HEDDEN	so	

22 records.

Key	Surname	Given Names	Nee	G	B-Yr	MoDy	S	CtryS/P	City Born	D-Yr	MoDy	CtryS/P	City Died	Md#1	MoDy	T	Md#2	MoDy	T	Mail Addr#1	Mail City	Comments	Ref
A	ANDERSON	Benjamin		M	1699	xxxx		1RE	Antrim	1792	xxxx			17xx	xxxx								42
A*	ANDERSON	Hannah	WILSON	F	1709	xxxx		1RE	County Down	1793	xxxx			17xx	xxxx								42
A1	ANDERSON	Samuel		M	1736	xxxx				1836	06xx			1761	xxxx								42
A1*	ANDERSON	Deliverance	BUTTS	F	1743	xxxx				1824	xxxx			1761	xxxx								42
A11	ANDERSON	Joseph		M	1763	xxxx				1853	xxxx			178x	xxxx								42
A11*	ANDERSON	Johanna	FARRAND	F	176x	xxxx				18xx	xxxx			178x	xxxx								42
A111	ANDERSON	Robrt Isaac Dey Gray		M	1792	xxxx				1874	0416												42
A112	PRINGLE	Anne Margaret	ANDERSON	F	1796	0419				1870	08xx			1814	1003							P115*	42
A112*	PRINGLE	James		M	1784	xxxx				1860	xxxx			1814	1003							P115	42
A113	CLOWES	Delia	ANDERSON	F	1800	xxxx				1882	xxxx			18xx	xxxx								42
A113*	CLOWES	James		M	180x	xxxx				18xx	xxxx			18xx	xxxx								42
A1131	HILLS	Johanna	CLOWES	F	18xx	xxxx				18xx	xxxx			18xx	xxxx								42
A1131*	HILLS	Benjamin		M	18xx	xxxx				18xx	xxxx			18xx	xxxx								42
A1132	SHEARER	Mary	CLOWES	F	18xx	xxxx				<'92	xxxx			18xx	xxxx								42
A1132*	SHEARER	James		M	18xx	xxxx				18xx	xxxx			18xx	xxxx								42
A11321	SHEARER	son/daughter?		?	18xx	xxxx				1xxx	xxxx												42
A11322	SHEARER	son/daughter?		?	18xx	xxxx				1xxx	xxxx												42
A1133	SHEARER	Samuel		M	18xx	xxxx				1xxx	xxxx												42
A12	ANDERSON	Ebenezer		M	176x	xxxx				<'24	xxxx												42
A13	ANDERSON	James		M	176x	xxxx				18xx	xxxx			17xx	xxxx							More than one son - daughters?	42
A13*	ANDERSON	?	?	F	176x	xxxx				18xx	xxxx			17xx	xxxx							More than one son - daughters?	42
A131	ANDERSON	?		M	179x	xxxx																	42
A14	ANDERSON	Cyrus		M	177x	xxxx				<'24	xxxx												42
A15	ANDERSON	Thomas Gummersal		M	1779	1112				1875	0216												42
A16	ANDERSON	George		M	17xx	xxxx				xxxx	xxxx			18xx	xxxx								42
A16*	ANDERSON	?	?	F	17xx	xxxx				xxxx	xxxx			18xx	xxxx								42
A161	ANDERSON	Thos G		M	18xx	xxxx				xxxx	xxxx												42
A17	MCKAY	Anne (Nancy)	ANDERSON	F	17xx	xxxx				18xx	xxxx			18xx	xxxx							No children	42
A17*	MCKAY	Lawrence		M	17xx	xxxx				18xx	xxxx			18xx	xxxx							No children	42
A2	ANDERSON	son/daughter?		?	173x	xxxx				1xxx	xxxx												42
A3	ANDERSON	son/daughter?		?	173x	xxxx				1xxx	xxxx												42
A4	ANDERSON	son/daughter?		?	174x	xxxx				1xxx	xxxx												42
A5	ANDERSON	son/daughter?		?	174x	xxxx				1xxx	xxxx												42
A6	ANDERSON	son/daughter?		?	174x	xxxx				1xxx	xxxx												42
A7	ANDERSON	son/daughter?		?	174x	xxxx				1xxx	xxxx												42
A8	ANDERSON	son/daughter?		?	174x	xxxx				1xxx	xxxx												42
A9	ANDERSON	son/daughter?		?	174x	xxxx				1xxx	xxxx												42

37 records.

March 1, 1991 at 7:42 a.m.

	Key	Surname	Gi
	A	ANDERSON	Be
1	A*	ANDERSON	Hi
	A1	ANDERSON	Si
	A1*	ANDERSON	De
3	A11	ANDERSON	Jo
4	A11*	ANDERSON	Jo
	A111	ANDERSON	Ro
5	A112	PRINGLE	An
6	A112*	PRINGLE	Ja
7	A113	CLOWES	De
	A113*	CLOWES	Ja
8	A1131	HILLS	Jo
9	A1131*	HILLS	Be
10	A1132	SHEARER	Mi
	A1132*	SHEARER	Ja
11	A11321	SHEARER	sc
12	A11322	SHEARER	sc
13	A1133	SHEARER	Si
	A12	ANDERSON	El
14	A13	ANDERSON	Ja
15	A13*	ANDERSON	?
16	A131	ANDERSON	?
	A14	ANDERSON	Cy
17	A15	ANDERSON	Th
18	A16	ANDERSON	Ge
19	A16*	ANDERSON	?
	A161	ANDERSON	Th
20	A17	MCKAY	An
21	A17*	MCKAY	La
22	A2	ANDERSON	sc
	A3	ANDERSON	sc
23	A4	ANDERSON	sc
24	A5	ANDERSON	sc
25	A6	ANDERSON	sc
	A7	ANDERSON	sc
26	A8	ANDERSON	sc
27	A9	ANDERSON	sc

37 records.

Key	Surname	Given Names	Nee	G	B-Yr	MoDy	S	CtryS/P	City Born	D-Yr	MoDy	CtryS/P	City Died	Md#1	MoDy	T	Md#2	MoDy	T	Mail Addr#1	Mail City	Comments	Ref
0	OGLIVY	Walter (Sir)		M	13xx	xxxx				1392	xxxx			13xx	xxxx								42
0*	OGLIVY	?	?	F	13xx	xxxx				1392	xxxx			13xx	xxxx								42
01	OGLIVY	? (Lord)		M	13xx	xxxx				1411	xxxx			13xx	xxxx								42
02	OGLIVY	Walter (Sir)		M	13xx	xxxx				14xx	xxxx			1xxx	xxxx								42
02*	OGLIVY	Isabel	deDURWARD	F	13xx	xxxx				14xx	xxxx			1xxx	xxxx								42
021	OGLIVY	John (Sir)		M	14xx	xxxx				14xx	xxxx												42
022	OGLIVY	Walter (Sir)		M	14xx	xxxx				14xx	xxxx			14xx	xxxx		14xx	xxxx					42
022*	OGLIVY	?	SINCLAIR	F	14xx	xxxx				14xx	xxxx			14xx	xxxx							DO Sir John Sinclair	42
022+	OGLIVY	Mary (Lady)	DOUGLAS	F	14xx	xxxx				14xx	xxxx			14xx	xxxx								42
0221	OGLIVY	James (Lord)		M	1xxx	xxxx				1xxx	xxxx			1xxx	xxxx								42
0221*	OGLIVY	?	?	F	1xxx	xxxx				1xxx	xxxx			1xxx	xxxx								42
02211	OGLIVY	Walter		M	1xxx	xxxx				1xxx	xxxx											Died before his father	42
02212	OGLIVY	James		M	1xxx	xxxx				1xxx	xxxx												42
02213	OGLIVY	Patrick (Col)		M	1xxx	xxxx				1xxx	xxxx			1xxx	xxxx								42
02213*	OGLIVY	Elizabbeth (ABERCROMBIE)	BAIRD	F	1xxx	xxxx				1xxx	xxxx			1xxx	xxxx		1xxx	xxxx				B* - 1st wo Sir Alexander Abercrombie	42
022131	FRASER	Anne	OGLIVY	F	1xxx	xxxx				1xxx	xxxx			1xxx	xxxx								42
022131*	FRASER	John		M	1xxx	xxxx				1xxx	xxxx			1xxx	xxxx								42
0221311	WILSON	?	FRASER	F	1xxx	xxxx				1xxx	xxxx			1xxx	xxxx								42
0221311*	WILSON	?		M	1xxx	xxxx				1xxx	xxxx			1xxx	xxxx								42
0221312	COWAN	?		F	1xxx	xxxx				1xxx	xxxx			1xxx	xxxx								42
0221312*	COWAN	?		M	1xxx	xxxx				1xxx	xxxx			1xxx	xxxx								42
02213121	PRINGLE	Margaret	COWAN	F	1xxx	xxxx				1xxx	xxxx			1xxx	xxxx							P11*	42
02213121*	PRINGLE	Dunbar		M	1xxx	xxxx				1xxx	xxxx			1xxx	xxxx							P11	42
0221313	FOREST	?	FRASER	F	1xxx	xxxx				1xxx	xxxx			1xxx	xxxx								42
0221313*	FOREST	?		M	1xxx	xxxx				1xxx	xxxx			1xxx	xxxx								42
0221314	FRASER	John		M	1xxx	xxxx				1xxx	xxxx												42
0221315	FRASER	James		M	1xxx	xxxx				1xxx	xxxx												42
0221316	FRASER	Elizabeth		F	1xxx	xxxx				1xxx	xxxx												42

28 records.

March 1, 1991 at 7:44 a.m.

	Key	Surname	Gi
	0	OGLIVY	Wa
1	0*	OGLIVY	?
	01	OGLIVY	?
	02	OGLIVY	Wa
3	02*	OGLIVY	Is
4	021	OGLIVY	Jo
5	022	OGLIVY	Wa
	022*	OGLIVY	?
6	022+	OGLIVY	Ma
7	0221	OGLIVY	Ja
8	0221*	OGLIVY	?
	02211	OGLIVY	Wa
9	02212	OGLIVY	Ja
10	02213	OGLIVY	Pa
11	02213*	OGLIVY	El
	022131	FRASER	An
12	022131*	FRASER	Jo
13	0221311	WILSON	?
14	0221311*	WILSON	?
	0221312	COWAN	?
15	0221312*	COWAN	?
16	02213121	PRINGLE	Ma
17	02213121*	PRINGLE	Du
	0221313	FOREST	?
18	0221313*	FOREST	?
19	0221314	FRASER	Jo
20	0221315	FRASER	Ja
	0221316	FRASER	El
21			
22	28 records.		
23			
24			
25			
26			
27			
28			
29			
30			
31			
32			
33			
34			
35			
36			
37			
38			
39			
40			
41			
42			
43			
44			
45			
46			
47			
48			
49			
50			
51			
52			
53			
54			
55			
56			
57			

Key	Surname	Given Names	Nee	G	B-Yr	MoDy	S	CtryS/P	City Born	D-Yr	MoDy	CtryS/P	City Died	Md#1	MoDy	T	Md#2	MoDy	T	Mail Addr#1	Mail City	Comments	Ref
B	ABERCROMBIE	Alexander (Sir)		M	xxxx	xxxx				xxxx	xxxx			xxxx	xxxx								42
B*	ABERCROMBIE	Elizabeth	BAIRD	F	xxxx	xxxx				xxxx	xxxx			xxxx	xxxx							DO William Baird	42
B1	ABERCROMBIE	James (Sir)		M	xxxx	xxxx	*			xxxx	xxxx												42
B2	ABERCROMBIE	Alexander		M	xxxx	xxxx	*			xxxx	xxxx			xxxx	xxxx								42
B2*	ABERCROMBIE	?	?	F	xxxx	xxxx				xxxx	xxxx			xxxx	xxxx								42
B21	ABERCROMBIE	George		M	xxxx	xxxx				xxxx	xxxx			xxxx	xxxx								42
B21*	ABERCROMBIE	?	?	F	xxxx	xxxx				xxxx	xxxx			xxxx	xxxx								42
B211	ABERCROMBIE	Ralph (Genl Sir)		M	xxxx	xxxx				1801	xxxx			xxxx	xxxx								42
B3	CARGILL	Anne	ABERCROMBIE	F	17xx	xxxx	*			18xx	xxxx			xxxx	xxxx								42
B3*	CARGILL	Thomas		M	17xx	xxxx				18xx	xxxx			xxxx	xxxx								42
B31	CARGILL	son		M	18xx	xxxx				18xx	xxxx											Died young	42
B32	CARGILL	Elizabeth		F	18xx	xxxx				18xx	xxxx											Unmarried	42
B33	?	Anne	CARGILL	F	18xx	xxxx				18xx	xxxx			18xx	xxxx								42
B33*	?	? (Prof)		M	18xx	xxxx				18xx	xxxx			18xx	xxxx								42
B331	?	son		M	18xx	xxxx				18xx	xxxx											Died young	42
B34	GODDERAR	?	CARGILL	F	18xx	xxxx				18xx	xxxx			18xx	xxxx								42
B341	ROBERTSON	Mary	GODDERAR	F	18xx	xxxx				18xx	xxxx			18xx	xxxx								42
B341*	ROBERTSON	John		M	18xx	xxxx				18xx	xxxx			18xx	xxxx								42
B342	PRINGLE	Jean	GODDERAR	F	18xx	xxxx				18xx	xxxx			18xx	xxxx							P1*	42
B342*	PRINGLE	Robert		M	18xx	xxxx				18xx	xxxx			18xx	xxxx							P1	42

20 records.

March 1, 1991 at 7:46 a.m.

Key	Surname	Gi	...
B	ABERCROMBIE	Al	
B*	ABERCROMBIE	El	
B1	ABERCROMBIE	Ja	
B2	ABERCROMBIE	Al	nder
B2*	ABERCROMBIE	?	
B21	ABERCROMBIE	Ge	
B21*	ABERCROMBIE	?	
B211	ABERCROMBIE	Ra	(G
B3	CARGILL	An	
B3*	CARGILL	Th	
B31	CARGILL	so	
B32	CARGILL	El	net)
B33	?	An	
B33*	?	?	
B331	?	so	
B34	GODDERAR	?	
B341	ROBERTSON	Ma	
B341*	ROBERTSON	Jo	
B342	FRINGLE	Je	
B342*	FRINGLE	Ro	t

20 records.

10-22-1993 18:40:49 FAMILY TREE (Descendancy) LISTING Page 1

= Descendant x = 1st Spouse + = 2nd Spouse = 3rd Spouse (Addl Spouse(s))

Key		Born-Died-Md#1	Brn	Res	County	Source	Comments	Street Address/or misc	Location
K	===== BULL, George E	1820-1xxx-184e	ON x	ON	Hasting		b.181S? b.USA?		Stirling
Kx	x BULL, Emma (St_JOHNS)	1830-1xxx-184e	ON	ON	Hasting				Stirling
K1	===== JELLETT, Sara Susan Margaret (BULL)	1850-1900-1870	ON	ON	Hasting		md.6/8?		Belleville
K1x	x JELLETT, Morgan O	1837-1881-1863	ON	ON	Hasting		Md twice		Belleville
K11	===== JELLETT(x), Kathleen	186e-18xx-	ON	ON	Hasting				Belleville
K12	===== JELLETT(x), Morgan	1866-1867-	ON	ON	Hasting				Belleville
K13	===== JELLETT(x), Ernest	1868-18xx-	ON	ON	Nasting		Twin		Belleville
K14	===== JELLETT(x), Charles	1868-18xx-	ON	ON	Nasting		Twin		Belleville
K15	===== JELLETT(+), Bertie Cecil (Timothy)	1871-1878-	ON	ON	Nasting				Belleville
K16	===== JELLETT(+), Timothy	187e-18xx-	ON	ON	Nasting				Belleville
K17	===== JELLETT(+), Morgan	1877-1953-1911	ONT	ON			No children		
K17x	x JELLETT, Beatrice Mary (BICKFORD)	187x-195x-xxxx	ONT	ON			No children		
K18	===== ILER(+), Sophia Marguerite (JELLETT)	1882-1968-1914	ONT				J6S+ (JBASE)		
K18x	x ILER, Burritt	185l-1929-1877	ON				J6S (JBASE)		
K185	===== ILER(+), Morgan Burritt	1917- -1942	ONT	NE	Douglas x			2117 So 108th St	Omaha
K185x	x ILER, Grace Ellen (BAULCN)	1912- -1942	ONT	NE	Douglas		M53	2117 So 108th St	Omaha
K185l	===== ROSE, Marguerite Ellen (ILER)	194S- -1966	ONT	WA				5E S40 Nighland Way	Pullman
K185lx	x ROSE, Jerman Walter III	1944- -1966	NY	WA				5E S40 Highland Way	Pullman
K185l1	===== ROSE, Robert Morgan	1966- -1990	NE	NE					West Point
K185l1x	x ROSE, Susan Jane (STOUT)	1967- -1990	NE	NE					West Point
K185l11	===== ROSE, Morgan James	1992- -	NE	NE					West Point
K185l2	===== ROSE, Kathryn Grace	1969- -	KS	NJ					
K185l3	===== ROSE, Molly Anne	1977- -	NE	WA				5E S40 Nighland Way	Pullman
K185l4	===== ROSE, Daniel James	1979- -	NE	WA				5E S40 Nighland Way	Pullman
K185l5	===== ROSE, Mary Elaine	1981- -	NE	WA				5E S40 Nighland Way	Pullman
K185 2	===== ILER, Douglas Morgan	1946- -1968	ONT	NC					Charlotte
K185 2x	x ILER, Karen E (NELSEN)	1946- -1968	NE	NE		72		3604 So 107th St	Omaha
K185 2+	+ ILER, Gail (ETNIER)	1948- -1981	WI	NC					Charlotte
K185 21	===== ILER(x), Kari Lynn	1971- -	IA	CO					Colrado Sprin
K185 22	===== ILER(x), Jennifer Elaine	1974- -	MN	NE				3604 So 107th St	Omaha
K185 3	===== ILER, Grace Elaine	1956- -	ONT	MO				7717 Madison	Kansas City
K2	===== KEWIN, Emma St John's (BULL)	185A-192S-187e	ON						
K2x	x KEWIN, Edwin	1836-1918-187e							
K21	===== KEWIN, Muriel Elaine	1887-1896-							
K22	===== PRINGLE, Emma Kathleen (KEWIN)	1889-195A-1919					P11545x		
K22x	x PRINGLE, Edwin (Ted) Corydon	1874-1953-1919					P11545		
K221	===== PRINGLE, John Edwin Coryden	1920- -1947	ONT	ONT	M9N 2A4		Separated 1970	2460 Weston Rd - Apt 2707	Toronto
K221x	x PRINGLE, Diana (SCHWARTZ)	1921- -1947	ONT				Separated 1970:do Geo Bryant & Constance (Henderson) Schwartz		
K2211	===== PRINGLE, David	1949- -1979	ONT						
K2211x	x PRINGLE, Saundra (WALSH)	195B- -1979					do Johne & June (Overbay) Walsh		
K22111	===== PRINGLE, Janet Elizabeth	1980- -							
K22112	===== PRINGLE, Laura Dawn	1983- -							
K22113	===== PRINGLE, Robert George	1986- -							
K2212	===== PRINGLE, Duncan	195 2- -1974	ONT						
K2212x	x PRINGLE, Nicole (Nicky) (LEBEAU)	1954- -1974	ONT						
K22121	===== PRINGLE, Adam Bryant	1976- -							
K22122	===== PRINGLE, Jonathan Marc	1980- -							
K22123	===== PRINGLE, Suzanne Maryse	1981- -							
K222	===== SECORD, Elizabeth (PRINGLE)	1922- -1947	ONT	ONT	K2A 2T5			65S Mansfield Ave	Ottawa
K222x	x SECORD, Allen	1920-1981-1947	ONT				Died of cancer:so Herbert Secord		
K2221	===== SECORD, John	1949- -1981	ONT				Dvc'd 11/13/80		
K2221x	x SECORD, Helen (WILDERS)	194x- -1981	ONT				Dvc'd 11/13/88		
K2222	===== ALEXANDER, Anne (ADAMS) (SECORD)	1953- -1978	ONT				Dvc'd m#1 '85		
K2222x	x ADAMS, Geoff	195S- -1978	ONT				Dvc'd 1985		
K2222+	+ ALEXANDER, Douglas	195B- -1987	ONT						
K22221	===== ADAMS(x), Robert	1980- -	ONT						
K22222	===== ALEXANDER(x), Myra	1990- -	ONT						
K2223	===== BLANEY, Mary (SECORD)	195S- -1975	ONT						

Key --------1-------2-------3-------4-------5-------6-------7-------8-------9-------A--------Born-Died-Md#1--Brn-Res-County--Source------Comments--------Street Address/or misc----Location-----

10-22-1993 - 18:40:49

Key --------1-------2-------3---

K ===== BULL, George
K* * BULL, Emma (

K1 ===== JELL
K1* * JELL

K11
K12
K13
K14
K15
K16
K17
K17*
K18
K18*

K185
K185*

K1851
K1851*

K18511
K18511*

K185111

K18512
K18513
K18514
K18515

K1852
K1852*
K1852+

K18521
K18522

K1853

K2 ===== KEWI
K2* * KEWI

K21
K22
K22*

K221
K221*

K2211
K2211*

K22111
K22112
K22113

K2212
K2212*

K22121
K22122
K22123

K222
K222*

K2221
K2221*
K2222
K2222*
K2222+

K22221
K22222

K2223

Key --------1-------2-------3---

Key		Born	Died	Md#1	Brn	Res	County	Source	Comments	Street Address/or misc	Location
K2223x	x BLANEY, Gary	1952-	-1975		ONT						
K22231	===== BLANEY, Diana	1985-	-		ONT						
K22232	===== BLANEY, Jane	1907-	-		ONT						
K22233	===== BLANEY, Elliott	1990-	-		ONT						
K2224	===== SECORO, Diana	1958-	1976-		ONT				Severely handicapped		
K223	===== RANEY, Gwynneth (PRINGLE)	1926-	-1968		ONT	ONT	N1A 2W6			MA SQUA BE - RR #7	Dunnville
K223x	x RANEY, Reg	1916-	-19xx		ONT	ONT	N1A 2W6			MA SQUA BE - RR #7	Dunnville
K23	===== KEWIN, George	1893-	1959-	1920	ONT				b.1891?		
K23x	x KEWIN, Dorothy Perryn (DUNSTAN)	1895-	1966-	1920	ONT				do Kenneth Jewell & Alice Adams (Peirce)Dunstan:b.1885/d.1959		
K231	===== MATTHEWS, Gwynneth Joan (KEWIN)	1926-	-1954		ON	ONT				1846 Stonepath Cres	Cooksville
K231x	x MATTHEWS, James Nelles	1926-	-1954		ON	ONT			so James Gerrie and Bonnie Madeleine (?) Matthews	1846 Stonepath Cres	Cooksville
K2311	===== MATTHEWS, James Edwin	1959-	-1986		ON	ON	Simcoe				
K2311x	x MATTHEWS, Heidi Marie (JAEKL)	1962-	-1986		ONT	ON	Simcoe				
K23111	===== MATTHEWS, James Joseph	1990-	-		ONT	ON	Simcoe				
K23112	===== MATTHEWS, Noelle Marie	1991-	-		ONT	ON	Simcoe				
K2312	===== GOERTZEN, Judith Ann (MATTHEWS)	1963-	-1989		ON	ON	Simcoe		Div 1992		
K2312x	x GOERTZEN, Randall	196e-	-1989		ONT	ON	Simcoe		Div 1990		
K232	===== KEWIN, Kenneth George	1927-	-1950		ONT	ONT			b.1928?		Burlington
K232x	x KEWIN, Maxine (GRANT)	1925-	-1950		ONT	ONT					Burlington
K2321	===== KEWIN, Corinne Anne	1958-	-		ONT	ONT					Burlington
K2322	===== WILLOWS, Jane Elizabeth (KEWIN)	1959-	-1989		ONT	ONT					
K2322x	x WILLOWS, Scott	195e-	-1989		ONT	ONT					
K2323	===== MacDONALD, Susan Daphne (KEWIN)	1960-	-1989		ONT	ONT					
K2323x	x MacDONALD, Brian	196e-	-1989		ONT	ONT					
K2324	===== KEWIN, Douglas	1962-	-		ONT	ONT					
K2325	===== KEWIN, Nancy Margaret	1964-	-		ONT	ONT					
K233	===== WARREN, Daphne (KEWIN)	1935-	-195x		ONT				Dvc'd		
K233x	x WARREN, Paul?	193x-	-195x						Dvc'd		
K2331	===== WARREN, Kenneth	196x-	-		ONT						
K2332	===== WARREN, Stephen	196x-	-198x		ONT						
K2332x	x WARREN, Sally (McCANN)	196x-	-198x		ONT						
K23321	===== WARREN, Jeffrey	1985-	-		ONT				b.1984?		
K23322	===== WARREN, Kyle	1991-	-		ONT				b.1989?		
K3	===== BULL, Elisa	1857-	1xxx-		ON						
K4	===== BULL, Solomon	1860-	1xxx-		ON						

Key --------1-------2-------3-------4-------5-------6-------7-------8-------9-------A---------- Born-Died-Md#1--Brn-Res-County--Source------Comments----------Street Address/or misc----Location-----

Total names= 93

1
4
5
6
7
8
9
10
11
12
13
14
15
16
17
18
19
20
21
22
23
24
25
26
27
28
29
30
31
32
33
34
35
39
40
41
42
43
44
45
46
47
48
49
50
51
52
53
54
55
56
57
58
59
60
61
62
63
64
65
66
67
8
69
72
73
74
75
76

10-22-1993 - 20:42:25 FA

Key --------1-------2-------3--

P ===== PRINGLE, [fo
P* * PRINGLE, [mo

P1 ===== PRIN
P1* * PRIN

P11 ==
P11*

P111
P111*
P111+
P112
P112*

P1121
P1122
P1123
P1124
P1125
P1126
P1127
P1127*

P113
P113*
P114
P115
P115*

P1151
P1151*

P11511
P11511*
P11511+

P115111
P115112
P115112*

P11512
P11512*

P115121
P115122
P115123
P115124

P11513
P11513*

P115131
P115132
P115133
P115134
P115135
P115136
P115137

P11514
P11515
P11515*
P11516
P11516*

P115161
P115161*

P1151611
P1151611*

P11516111
P11516111*

P115161111
P115161112

P11516112

Key --------1-------2-------3-

1
4
5
6
7
8
9
10
11
12
13
14
15
16
17
18
19
20
21
22
23
24
25
26
27
28
29
30
31
32
33
34
35
3
39
40
41
42
43
44
45
46
47
48
49
50
51
52
53
54
55
56
57
58
59
60
61
62
63
64
65
66
67
68
69
72
73
74
75
76

Key		Born-Died-Mdl#1	Brn-Res-County	Source	Comments	Street Address/or misc	Location
P	===== PRINGLE, [fo Robert/James]	16xx-17xx-17xx					
P¤	¤ PRINGLE, [mo Robert/James] (UNKNOWN)	16xx-17xx-17xx					
P1	===== PRINGLE, Robert	171x-1772-174x	SCT				Peebleshire
P1¤	¤ PRINGLE, Jean (GOODERAR)	171x-17xx-174x			Mn=Goderar?		Peebleshire
P11	===== PRINGLE, Dunbar	1742-1791-1774	SCT		Merchant		Edinburgh
P11¤	¤ PRINGLE, Margaret Anne (COWAN)	1751-1791-1774					
P111	===== PRINGLE, Robert Abercrombie	1775-1840-180x					
P111¤	¤ PRINGLE, [1wo Robert Abercrombie] (UNKNOWN)	177x-18xx-180x			Sicilian lady of rank - died young - no children		
P111+	+ PRINGLE, [2wo Robert Abercrombie] (UNKNOWN)	177x-1840-181x			No issue		
P112	===== FULLJAMES, Margaret (PRINGLE)	1777-1820-180x	ENG				
P112¤	¤ FULLJAMES, Trophimus	177x-18xx-180x			Civil engineer		
P1121	===== FULLJAMES, Thomas	180x-18xx-					
P1122	===== FULLJAMES, Robert	180x-18xx-					
P1123	===== FULLJAMES, John Pringle	180x-18xx-					
P1124	===== FULLJAMES, [so Margaret/Trophimus]	181x-('92-					
P1125	===== FULLJAMES, [do Margaret/Trophimus]	181x-18xx-					
P1126	===== FULLJAMES, [do Margaret/Trophimus]	181x-18xx-					
P1127	===== BALFOUR, Margaret (FULLJAMES)	181x-('92-183e					
P1127¤	¤ BALFOUR, Capt [ho Margaret]	181x-18xx-183e					
P113	===== PRINGLE, George	1778-1834-180e			No issue?		
P113¤	¤ PRINGLE, [wo George] (UNKNOWN)	177x-18xx-180e					
P114	===== PRINGLE, Dunbar	1782-1805-					
P115	===== PRINGLE, James	1784-1860-1814					
P115¤	¤ PRINGLE, Anne Margaret (ANDERSON)	1796-1870-1814					
P1151	===== PRINGLE, Jacob Farrand	1816-1901-1844					
P1151¤	¤ PRINGLE, Isabella (FRASER)	1025-18xx-1844			do Hon Alexander Fraser:5 dau/5 sons		
P11511	===== CORBETT, Anne (MOREN) (PRINGLE)	184e-1xxx-187x					
P11511¤	¤ MOREN, Arthur (MD)	184e-1883-187e	NS				Halifax
P11511+	+ CORBETT, Frederick O	184e-1xxx-188x	NS		Merchant and ship owner		Halifax
P115111	===== MOREN(¤), [so Anne/Arthur]	187x-187x-			Died in infancy		
P115112	===== MOREN(¤), Arthur Fraser Stirling	187x-19xx-189x					
P115112¤	¤ MOREN, Johanna Rubidge (HAZEN)	187x-19xx-189x	NB				St John
P11512	===== HALL, Margaret (PRINGLE)	184e-1xxx-186e					
P11512¤	¤ HALL, Francis J	184e-('92-186e	ON		so James Hall, sheriff		Peterborough
P115121	===== HALL, George Russell	186e-1xxx-					
P115122	===== HALL, Francis James	186e-1xxx-					
P115123	===== HALL, Harry Leslie	187e-1xxx-					
P115124	===== HALL, Farrand	187e-1xxx-					
P11513	===== RITCHIE, Isabella (PRINGLE)	185e-1xxx-187e					
P11513¤	¤ RITCHIE, Thomas	185e-1xxx-107e	NS		Barrister:so Hon John William Ritchie		Halifax
P115131	===== RITCHIE, Thomas Fraser	187e-1xxx-					
P115132	===== RITCHIE, John William Pringle	187e-1xxx-					
P115133	===== RITCHIE, Lewis Farrand	187e-1xxx-					
P115134	===== RITCHIE, Mary Christine	187e-1xxx-					
P115135	===== RITCHIE, Beatrice Lichtenstein	187e-1xxx-					
P115136	===== RITCHIE, Edith Isabella	188e-1xxx-					
P115137	===== RITCHIE, Ella Almon	188e-1xxx-					
P11514	===== PRINGLE, James Farrand	185e-1xxx-					
P11515	===== PRINGLE, Alexander Fraser (MD)	185e-1xxx-188e					
P11515¤	¤ PRINGLE, Clara (ALLEN)	185e-1xxx-188e	MN		do Seymour Allen, merchant		Northfield
P11516	===== PRINGLE, Robert Abercrombie	1855-1xxx-188e			Barrister		
P11516¤	¤ PRINGLE, Emma Ada (Van_ARSDALE)	185e-19xx-188e	ON				Cornwall
P115161	===== PRINGLE, James Farrand	1885-1949-1909			b.1876?		
P115161¤	¤ PRINGLE, Mildred (COOKE)	1885-1959-1909					
P1151611	===== PRINGLE, James(Tod) Farrand	1911-1987-1949					
P1151611¤	¤ PRINGLE, Helen Jane (HICKS)	1929-19xx-1949					
P11516111	===== BURNS, Sally Elizabeth (PRINGLE)	1950- -1977					
P11516111¤	¤ BURNS, Robert A	195e- -1977					
P115161111	===== BURNS, Robert James	1980- -					
P115161112	===== BURNS, John Tyler	1981- -					
P11516112	===== PRINGLE, William Tod	1952- -					

1
4
5
6
7
8
9
10
11
12
13
14
15
16
17
18
19
20
21
22
23
24
25
26
27
28
29
30
31
32
34
35
39
40
41
42
44
45
46
47
48
49
50
51
52
53
54
55
56
57
59
60
61
62
63
64
67
68
72
73
75
76

10-22-1993 - 20:42:40

Key --------1-------2-------3-

P11516113
P11516113*
P11516114

P1151612
P1151612*

P11516121
P11516122
P11516122*

P115161221
P115161222

P11516123

P1151613
P1151613*
P1151614
P1151614*

P11516141
P11516141*

P115161411
P115161412
P115161413

P11516142
P11516142*

P115161421
P115161422
P115161423

P11516143
P11516143*

P115161431

P11516144
P11516144*

P115161441
P115161442

P11516145

P1151615
P1151615*

P11516151
P11516151*

P115161511
P115161512
P115161513
P115161514

P11516152
P11516152*

P115161521
P115161522

P115162
P115163

P11517
P11518
P11518*

P115181
P115182

P11519
P1151A

P1152
P1152*

Key --------1-------2-------3- ---/

1
4
5
6
7
8
9
10
11
12
13
14
15
16
17
18
19
20
21
22
23
24
25
26
27
28
29
30
31
32
33
35
39
40
41
42
44
45
46
47
48
49
51
52
53
54
55
56
57
59
60
61
62
63
64
67
68
73
75
76

Key	A	8orn-Died-Md#1	8rn-Res-County	Source	Comments	Street Address/or misc	Location
P11516113	===== PRINGLE, John Andrew	1954- -198e			Div'd 1990		
P11516113¤	¤ PRINGLE, Cheryl Carpenter (HRYNUK)	1964- -198e			Div'd 1990		
P11516114	===== PRINGLE, Robert Abercrombie	1962- -					
P1151612	===== PRINGLE, Robert Arthur	1913-1962-1940					
P1151612¤	¤ PRINGLE, Elizabeth (8essie) A (WE88)	1911- -1940					
P11516121	===== PRINGLE, William	1941- -					
P11516122	===== MURRAY, Sidney Isabella (PRINGLE)	1943-1991-1969					
P11516122¤	¤ MURRAY, George Kelmanla	1945-1991-1969					
P115161221	===== MURRAY, Robert	1971- -					
P115161222	===== MURRAY, Yves	1974- -					
P11516123	===== PRINGLE, James Farrand	1946- -					
P1151613	===== PRINGLE, William Alfred	1915-1965-1955					
P1151613¤	¤ PRINGLE, Doris (ODHERTY)	191e- -1955					
P1151614	===== WRIGHT, Constance Mildred (PRINGLE)	1917- -1941					
P1151614¤	¤ WRIGHT, John Lennox	1911- -1941					
P11516141	===== ELLIS, Constance Mary (WRIGHT)	1942- -1966					
P11516141¤	¤ ELLIS, Michael	194e- -1966					
P115161411	===== ELLIS, Heather Cecilia	1967- -					
P115161412	===== ELLIS, Thomas Wright	196e- -					
P115161413	===== ELLIS, Catherine Mary	1973- -					
P11516142	===== GARDINER, Heather Mildred (WRIGHT)	194e- -1963					
P11516142¤	¤ GARDINER, Edward John	194D-1987-1963					
P115161421	===== GARDINER, Constance	1969- -					
P115161422	===== GARDINER, Eliza	1971- -					
P115161423	===== GARDINER, Emily	1974- -					
P11516143	===== WRIGHT, William Andrew	1946- -197e					
P11516143¤	¤ WRIGHT, Ann (VanKESSEL)	1952- -197e					
P115161431	===== WRIGHT, Andrew	1985- -					
P11516144	===== WRIGHT, James de Pencier	1948-1989-1974					
P11516144¤	¤ WRIGHT, Anne (DDTY)	194e- -1974					
P115161441	===== WRIGHT, Ian James	1979- -					
P115161442	===== WRIGHT, Nicholas	1982- -					
P11516145	===== WRIGHT, David Lockridge	1955- -					
P1151615	===== PRINGLE, John Abercrombie	1923- -1952					
P1151615¤	¤ PRINGLE, 8arbara Elizabeth (SLDAN)	193D- -1952					
P11516151	===== HODGINS, 8eth (PRINGLE)	1954- -1978					
P11516151¤	¤ HODGINS, Donald	1952- -1978					
P115161511	===== HODGINS, Sarah Elizabeth	1982- -					
P115161512	===== HODGINS, Armanda 8arbara	1984- -					
P115161513	===== HODGINS, Carolyn Anne	1986- -			Twin		
P115161514	===== HODGINS, Jillian Mary	1986- -			Twin		
P11516152	===== PRINGLE, Fraser	1955- -1982					
P11516152¤	¤ PRINGLE, Errica Anna Hubetina (RAPSCHENKDFF)	1962- -1982					
P115161521	===== PRINGLE, Sunni Elizbeth Anne	1985- -					
P115161522	===== PRINGLE, 8ownan John Gerhart	1989- -					
P115162	===== PRINGLE, Robert Hatfield	188e-19xx-					
P115163	===== PRINGLE, Isabel Edna Emily	189e-189e-			Died as an infant		
P11517	===== PRINGLE, George Urquhart	185e-1xxx-					
P11518	===== AYLMER, Mary Christine (PRINGLE)	186e-1xxx-188e					
P11518¤	¤ AYLMER, John Athelmer	186e-1xxx-188e		PQ	so Hon Henry Aylmer		Melbourne
P115181	===== AYLMER, Edith Christine	188e-1xxx-					
P115182	===== AYLMER, Dorothea	188e-1xxx-					
P11519	===== PRINGLE, William Rodger McIntyre	186e-1xxx-			MD		
P1151A	===== PRINGLE, Charlotte Edith	186e-188e-			Died age 19		
P1152	===== PRINGLE, James Dunbar	182D-1891-1848					
P1152¤	¤ PRINGLE, Mary (FRASER)	182x-1854-1848			do Hon Alexander Fraser		

1
4
5
6
7
8
9
10
11
12
13
14
15
16
17
18
19
20
21
22
23
24
25
26
27
28
29
30
31
32
33
34
35
36
37
40
41
42
43
44
45
46
47
48
49
50
51
52
53
54
55
56
57
58
59
60
61
62
63
64
65
66
67
68
69
72
73
74
75
76

10-22-1993 - 20:36:09
Key --------1-------2-------3---
P1152+

P11521
P11521*

P115211
P115212

P11522
P11522*

P115221

P11523
P11523*

P115231
P115232

P11524
P11525

P1153
P1153*
P1153+

P11531
P11531*

P115311
P115312
P115313
P115314
P115315
P115316
P115317

P11532
P11533
P11534
P11535
P11535*
P11536
P11536*

P115361

P11537
P11537*
P11538
P11539
P1153A

P1154
P1154*

P11541
P11541*

P115411
P115411*

P1154111
P1154112
P1154112*

P11541121
P11541122
P11541122*

P115411221
P115411222

P1154113
P1154113*

P115412
P115412*

P1154121

Key --------1-------2-------3-- --4

1
4
5
6
7
8
9
10
11
12
13
14
15
16
17
18
19
20
21
22
23
24
25
26
27
28
29
30
31
32
33
34
35
38
39
40
41
42
43
44
45
46
47
48
49
50
51
52
53
54
55
56
57
58
59
60
61
62
63
64
65
66
67
68
69
72
73
74
75
76

Key	Name	Born-Died-Md#1	Brn-Res-County	Source	Comments	Street Address/or misc	Location
P1152+	+ PRINGLE, Phoebe Emma (WILY)	182x-1854-1855					
P11521	===== TIFFANY(x), Gertrude (PRINGLE)	185x-1xxx-187e					
P11521x	x TIFFANY, Edward H	185x-1xxx-187e					
P115211	===== TIFFANY, Gertrude	187e-1xxx-					
P115212	===== TIFFANY, George	187e-1xxx-					
P11522	===== PRINGLE(+), Arthur Dunbar	185e-1xxx-187e					
P11522x	x PRINGLE, Alice Naomi (KINGSMILL)	185e-1xxx-187e					
P115221	===== PRINGLE, Julia Dunbar	187e-1xxx-					
P11523	===== PRINGLE(+), Robert Anderson	185e-1xxx-187e					
P11523x	x PRINGLE, Mary Robina (BEDELL)	185e-1xxx-187e					
P115231	===== PRINGLE, Frank Dunbar	187e-1xxx-					
P115232	===== PRINGLE, Marjorie	187e-1xxx-					
P11524	===== PRINGLE(+), May	185e-('92-					
P11525	===== PRINGLE(+), Margaret Blanche Daisy	186e-1xxx-					
P1153	===== WALLACE, Margaret (RUTTAN) (PRINGLE)	1824-1xxx-1847					
P1153x	x RUTTAN, Henry Jones (PRINGLE)	1824-1879-1847					
P1153+	+ WALLACE, John	182x-1xxx-1892					
P11531	===== RUTTAN(x), Henry Norland	182e-19xx-184x					
P11531x	x RUTTAN, Andrina (BARBERIE)	182e-19xx-184x	NB				Dalhousie
P115311	===== RUTTAN, [do Henry/Andrina]	186x-19xx-					
P115312	===== RUTTAN, [do Henry/Andrina]	186x-19xx-					
P115313	===== RUTTAN, [do Henry/Andrina]	186x-19xx-					
P115314	===== RUTTAN, [so Henry/Andrina]	187x-19xx-					
P115315	===== RUTTAN, [so Henry/Andrina]	187x-19xx-					
P115316	===== RUTTAN, [so Henry/Andrina]	187x-19xx-					
P115317	===== RUTTAN, [so Henry/Andrina]	187x-19xx-					
P11532	===== RUTTAN(x), James Farrand	184x-1xxx-					
P11533	===== RUTTAN(x), Ann Margaret	184x-1892-					
P11534	===== RUTTAN(x), Charles Dunbar	184x-1882-					
P11535	===== RUTTAN(x), Robert Anderson	185x-1xxx-187e					
P11535x	x RUTTAN, Ninon (ARMSTRONG)	185x-1xxx-187e					
P11536	===== PONTON(x), Mary Isabella (RUTTAN)	185x-18xx-187e					
P11536x	x PONTON, Douglas	185x-1xxx-187e					
P115361	===== PONTON, James Douglas	187x-1xxx-					
P11537	===== McDOUGALL(x), Catherine Corrigal (RUTTAN)	185x-('92-187x				No issue	
P11537x	x McDOUGALL, William	185x-('92-187x				No issue	
P11538	===== RUTTAN(x), Edith	185x-('92-					
P11539	===== RUTTAN(x), Shanley	185x-1xxx-					
P1153A	===== RUTTAN(x), Isabella May	185x-1xxx-					
P1154	===== PRINGLE, George (Dr)	1834-1906-1860					
P1154x	x PRINGLE, Catherine Sophia (FRENCH)	1842-19xx-1860				do Benjamin Gordon French-(so Albert French)-(so Jeremiah F.)	
P11541	===== TATE, Edith (PRINGLE)	1861-1941-1883					
P11541x	x TATE, R F	1854-1907-1883				Civil engineer	
P115411	===== GATES, Edith Maude (TATE)	1884-1974-1908					
P115411x	x GATES, Earl Douglas	1885-1967-1908					
P1154111	===== GATES, Arthur	19D9- -					
P1154112	===== GATES, George Horatio	1912- -1945					
P1154112x	x GATES, Emily (BOULDEN)	1921- -1945					
P11541121	===== GATES, Fraya Lynne	1947- -					
P11541122	===== GATES, Christopher George	1950- -1986					
P11541122x	x GATES, Barbara (PIM)	1953- -1986					
P115411221	===== GATES, Geoffrey David Christophe	1988- -					
P115411222	===== GATES, Katrina Emily	1990- -					
P1154113	===== PRUESS, Cecily (GATES)	1915- -1942					
P1154113x	x PRUESS, Charles Edward John	191e- -1942					
P115412	===== STRANGE, Lillian Georgina Hall (TATE)	1887-1961-1920					
P115412x	x STRANGE, George	1881-1967-1920					
P1154121	===== BOULDEN, Barbara Maxwell (STRANGE)	1921-1969-1942					

1
4
5
6
7
8
9
10
11
12
13
14
15
16
17
18
19
20
21
22
23
24
25
26
27
28
29
30
31
32
33
34
35
38
39
40
41
42
43
44
45
46
47
48
49
50
51
52
53
54
55
56
57
58
59
60
61
62
63
64
65
66
67
68
69
72
73
74
75
76

10-22-1993 - 20:37:10
Key --------1-------2-------3---

P1154121*

P11541211
P11541212
P11541212*

P115412121

P11541213

P1154122
P1154122*

P11541221
P11541222
P11541223
P11541224
P11541225
P11541225*

P115413
P115413*

P1154131
P1154131*

P11541311
P11541312
P11541313

P1154132
P1154132*

P11541321
P11541321*

P115413211
P115413212
P115413213

P11541322
P11541322*

P115413221
P115413222

P1154133
P1154133*

P11541331
P11541332

P1154134
P1154134*

P11541341
P11541342
P11541343
P11541344
P11541345

P115414
P115415
P115416
P115416*

P11542
P11543
P11544
P11545
P11545*

P115451
P115451*

P1154511
P1154511*

P11545111
P11545112

1
4
5
6
7
8
9
10
11
12
13
14
15
16
17
18
19
20
21
22
23
24
25
26
27
28
29
30
31
32
33
34
35
38
39
40
41
42
43
44
46
47
48
49
50
51
53
54
55
56
57
58
59
60
62
63
64
65
66
67
68
69
72
73
74
75
76

Key		Born-Died-Md#1	Brn	Res	County	Source	Comments	Street Address/or misc	Location
P11S4121x	* BOULDEN, Arthur	1914-1993-1942							
P11S41211	===== TATE, Frederick Peter (BOULDEN)	1946- -							
P11S41212	===== DRO, Jennifer Frances (BOULDEN)	1950- -1984							
P11S41212x	* DRO, Lewis Robert	1947- -1984							
P115412121	===== DRO, Lewis Ryan	1986- -							
P11S41213	===== STRANGE, Patricia Elizabeth	1955- -							
P11S4122	===== YOUNG, Elizabeth McGill (STRANGE)	1924-1986-1944							
P11S4122x	* YOUNG, Gilbert	1919- -1944							
P11S41221	===== YOUNG, Brian Gilbert	1945- -							
P11S41222	===== YOUNG, Geoffrey Strange	1950- -							
P11S41223	===== YOUNG, Timothy George	1960- -							
P11S41224	===== YOUNG, Bradley Warren	1962- -							
P11S41225	===== CHRISTOFIDES, Stephanie Barbara (STRANGE)	1964- -1990							
P11S41225x	* CHRISTOFIDES, Peter	1966- -1990							
P115413	===== KINGSMILL, Lucia Roberta Beatrix (TATE)	1889-19xx-1912							
P115413x	* KINGSMILL, John Gault	1882-1960-1912							
P11S4131	===== KINGSMILL, John Gault	1926- -1946							
P11S4131x	* KINGSMILL, Rosalind Constance (LACK)	1926- -1946							
P11S41311	===== KINGSMILL, Rosalind Ann	1949- -							
P11S41312	===== KINGSMILL, Catherine Gault	1951- -							
P11S41313	===== KINGSMILL, John Gault	1953- -							
P11S4132	===== KINGSMILL, William Gault	1926- -1946							
P11S4132x	* KINGSMILL, Allison Bristol (FOSTER)	1926- -1946							
P11S41321	===== UNKNOWN, Dorian Ann (KINGSMILL)	1950- -1970							
P11S41321x	* UNKNOWN, [ho Dorian Ann] (KINGSMILL)	1950- -1970							
P115413211	===== UNKNOWN, Cassandra	1970- -							
P115413212	===== UNKNOWN, Rita	1970- -							
P115413213	===== UNKNOWN, Roblyn	1970- -							
P11S41322	===== UNKNOWN, Suzanne Foster (KINGSMILL)	1952- -1970							
P11S41322x	* UNKNOWN, [ho Suzanne Foster] (KINGSMILL)	1950- -1970							
P115413221	===== UNKNOWN, Timothy	1970- -							
P115413222	===== UNKNOWN, Jesse	1970- -							
P11S4133	===== GAULT, Eleanor Mary Morrison (KINGSMILL)	1926- -1946							
P11S4133x	* GAULT, Hugh Anthony	1926- -1946							
P11S41331	===== GAULT, Judith	1950- -							
P11S41332	===== GAULT, Michael Kingsmill	1951- -							
P11S4134	===== KINGSMILL, Peter Gault	1926- -1946							
P11S4134x	* KINGSMILL, Ruth Elinor (MacDONALD)	1926- -1946							
P11S41341	===== KINGSMILL, Stephen	1951-1955-							
P11S41342	===== KINGSMILL, Robin Anne	1953- -							
P11S41343	===== KINGSMILL, Karen Anne	1957- -							
P11S41344	===== KINGSMILL, Patricia A	1959- -							
P11S41345	===== KINGSMILL, Carol Anne	1961- -							
P11S414	===== TATE, John Frederick Percy	1892-1960-							
P11S415	===== TATE, Bertram Arnold	1896-1968-							
P11S416	===== SNIDER, Muriel Elaine (TATE)	1901-1989-1927							
P11S416x	* SNIDER, Charlie	1891-1979-1927							
P11S42	===== PRINGLE, Leila Gordon	1864-1949-							
P11S43	===== PRINGLE, Elsie Small	1869-1951-							
P11S44	===== PRINGLE, Harold Dunbar	1872-1918-							
P11S45	===== PRINGLE, Edwin (Ted) Corydon	1874-1953-1919					K11x		
P11S45x	* PRINGLE, Emma Kathleen (KEWIN)	1889-1954-1919					K11		
P11S451	===== PRINGLE, John Edwin Coryden	1920- -1947	ONT	ONT	M9N 2A4		Separted 1970	2460 Weston Rd - Apt 2707	Toronto
P11S451x	* PRINGLE, Diana (SCHWARTZ)	1921- -1947	ONT				Separted 1970. DO Geo Bryant & Constance (Henderson) Schwartz		
P11S4511	===== PRINGLE, David	1949- -1979	ONT						
P11S4511x	* PRINGLE, Saundra (WALSH)	1958- -1979					DO Johne & June (Overbay) Walsh		
P11S45111	===== PRINGLE, Janet Elizabeth	1980- -							
P11S45112	===== PRINGLE, Laura Dawn	1983- -							

1
2
3
4
5
6
7
8
9
10
11
12
13
14
15
16
17
18
19
20
21
22
23
24
25
26
27
28
29
30
31
32
33
34
35
36
37
38
39
40
41
42
43
44
45
46
47
48
49
50
51
52
53
54
55
56
57
58
59
60
61
62
63
64
65
66
67
68
69
70
71
72
73
74
75
76

10-22-1993 - 20:38:15
Key --------1-------2-------3--
P11545113

P1154512
P1154512*

P11545121
P11545122
P11545123

P115452
P115452*

P1154521
P1154521*
P1154522
P1154522*
P1154522+

P11545221
P11545222

P1154523
P1154523*

P11545231
P11545232
P11545233

P1154524

P115453
P115453*

P1155
P1156
P1157
P1158
P1159

P116
P116*

P1161
P1161*
P1162
P1163
P1163*
P1164
P1165
P1165*
P1166
P1166*

P12

Key --------1-------2-------3--
Total names= 274

1
4
5
6
7
8
9
10
11
12
13
14
15
16
17
18
19
20
21
22
23
24
25
26
27
28
29
30
31
32
33
35
38
39
40
41
42
43
44
45
46
47
48
49
50
51
52
53
54
55
56
57
58
59
60
61
62
63
64
65
66
67
68
69
72
73
74
75
76

Key --------1-------2-------3-------4-------5-------6-------7-------8-------9-------A	Born-Died-Md#1--Brn-Res-County--Source------Comments	Street Address/or misc	Location
P11545113 ===== PRINGLE, Robert George	1986- -		
P1154512 ===== PRINGLE, Duncan	1952- -1974 ONT		
P1154512x x PRINGLE, Nicole (Nicky) (LEBEAU)	1954- -1974 ONT		
P11545121 ===== PRINGLE, Adam Bryant	1976- -		
P11545122 ===== PRINGLE, Jonathan Marc	1980- -		
P11545123 ===== PRINGLE, Suzanne Maryse	1981- -		
P115452 ===== SECORD, Elizabeth (PRINGLE)	1922- -1947 ONT ONT K2A 2T5	655 Mansfield Ave	Ottawa
P115452x x SECORD, Allen	1920-1981-1947 ONT Died of cancer. 50 Herbert Secord		
P1154521 ===== SECORD, John	1949- -1981 ONT Dvc'd 11/13/88		
P1154521x x SECORD, Helen (WILDERS)	194x- -1981 ONT Dvc'd 11/13/88		
P1154522 ===== ALEXANDER, Anne (ADAMS) (SECORD)	1953- -1978 ONT Dvc'd m#1 '85		
P1154522x x ADAMS, Geoff	1955- -1978 ONT Dvc'd 1985		
P1154522+ + ALEXANDER, Douglas	1958- -1987 ONT		
P11545221 ===== ADAMS(x), Robert	1980- - ONT		
P11545222 ===== ALEXANDER(x), Myra	1990- - ONT		
P1154523 ===== BLANEY, Mary (SECORD)	1955- -1975 ONT		
P1154523x x BLANEY, Gary	1952- -1975 ONT		
P11545231 ===== BLANEY, Diana	1985- - ONT		
P11545232 ===== BLANEY, Jane	1987- - ONT		
P11545233 ===== BLANEY, Elliott	1990- - ONT		
P1154524 ===== SECORD, Diana	1958-1976- ONT Severely handicapped		
P115453 ===== RANEY, Gwynneth (PRINGLE)	1926- -1968 ONT ONT N1A 2W6	MA SQUA BE - RR #7	Dunnville
P115453x x RANEY, Reg	1916- -19xx ONT ONT N1A 2W6	MA SQUA BE - RR #7	Dunnville
P1155 ===== PRINGLE, [co James/Anne]	186x-186x- Died in infancy		
P1156 ===== PRINGLE, [co James/Anne]	186x-186x- Died in infancy		
P1157 ===== PRINGLE, [co James/Anne]	186x-186x- Died in infancy		
P1158 ===== PRINGLE, [co James/Anne]	186x-186x- Died in infancy		
P1159 ===== PRINGLE, [co James/Anne]	186x-186x- Died in infancy		
P116 ===== PRINGLE, John	1785-1853-180e Lawyer		
P116x x PRINGLE, [wo John] (WALLACE)	178x-18xx-180e		
P1161 ===== STARK, Mary (PRINGLE)	182e-xxxx-184e		
P1161x x STARK, [ho Mary]	182e-xxxx-184e		
P1162 ===== PRINGLE, John	182e-)'92- SCT Surgeon		Edinburgh
P1163 ===== PRINGLE, George	182e-1xxx-184e ENG		Cheltenham
P1163x x PRINGLE, [wo George] (UNKNOWN)	182e-1xxx-184e		
P1164 ===== PRINGLE, Robert	183e-1xxx- Banker		
P1165 ===== MANSON, Margaret (PRINGLE)	183e-1xxx-185e		
P1165x x MANSON, Rev [ho Margaret]	183e-1xxx-185e		Fyvie
P1166 ===== ROSE, Grace (PRINGLE)	183e-1xxx-185e		
P1166x x ROSE, Rev [ho Grace]	183e-1xxx-185e		
P12 ===== PRINGLE, James	174e-18xx-		

Key --------1-------2-------3-------4-------5-------6-------7-------8-------9-------A | Born-Died-Md#1--Brn-Res-County--Source------Comments | Street Address/or misc | Location

Total names= 274

1
4
5
6
7
8
9
10
11
12
13
14
15
16
17
18
19
20
21
22
23
24
25
26
27
28
29
30
31
32
33
34
35
38
39
40
41
42
43
44
45
46
47
48
49
50
51
52
53
54
55
56
57
58
59
60
61
62
63
64
65
66
67
68
69
72
73
74
75
76

March 1, 1991 at 7:57 a.m.

Key	Surname	Gi	...
J	JELLETT	?	
J*	JELLETT	?	
J1	JELLETT	Mo	.
J1*	JELLETT	Sa	S M
J11	JELLETT	Mo	
J11*	JELLETT	Be	
J12	ILER	So	..
J12*	ILER	Bu	tt
J2	PLEESE	Ka	
J2*	PLEESE	Re	
J3	JELLETT	(J	..

11 records.

1
4
5
6
7
8
9
10
11
12
13
14
15
16
17
18
19
20
21
22
23
24
25
26
27
28
29
30
31
32
33
34
35
38
39
40
41
42
43
44
46
47
48
49
50
51
52
53
54
55
56
57
58
59
60
63
64
65
66
67
68
69
72
73
74
75
76

Key	Surname	Given Names	Nee	G	B-Yr	MoDy	S	CtryS/P	City Born	D-Yr	MoDy	CtryS/P	City Died	Md#1	MoDy	T	Md#2	MoDy	T	Mail Addr#1	Mail City	Comments	Ref
J	JELLETT	?		M	xxxx	xxxx				xxxx	xxxx	CAN ONT	Belleville	xxxx	xxxx								
J*	JELLETT	?	?	F	xxxx	xxxx				>'73	xxxx	CAN ONT	Belleville	xxxx	xxxx								
J1	JELLETT	Morgan		M	xxxx	xxxx			?	1881	09xx	CAN ONT	Belleville	xxxx	xxxx	K							
J1*	JELLETT	Sara S M	BULL	F	1850	1116				1900	0109	CAN ONT	Belleville	xxxx	xxxx								
J11	JELLETT	Morgan		M	1877	0731		CAN ONT	Belleville	1953	0819	CAN ONT	Toronto	xxxx	xxxx								
J11*	JELLETT	Beatrice	BICKFORD	F	xxxx	xxxx		CAN ONT	Kingston?	195x	xxxx	CAN ONT		xxxx	xxxx								
J12	ILER	Sophia Marguerite	JELLETT	F	1882	0425		CAN ONT	Belleville	1968	0127	USA NE	Omaha	1914	1218	J						J65+ (JBASE)	
J12*	ILER	Burritt		M	1851	1127		CAN ONT	Arner	1929	0319	USA FL	St Petersburg	1877	0604	J	1914	1218				J65 (JBASE)	
J2	PLEESE	Kate	JELLETT	F	xxxx	xxxx				xxxx	xxxx	CAN ONT		xxxx	xxxx								
J2*	PLEESE	Rev. T.		M	xxxx	xxxx				xxxx	xxxx	CAN ONT		xxxx	xxxx								
J3	JELLETT	(Judge)		M																		Picton	

11 records.

March 1, 1991 at 7:58 a.m.

Key	Surname
M	MACDONELL
M*	MACDONELL
M1	MACDONELL
M1*	MACDONELL
M11	MACDONELL
M12	MACDONELL
M13	MACDONELL
M13*	MACDONELL
M14	MACDONELL
M14*	MACDONELL
M15	TREADWELL
M15*	TREADWELL
M16	FRASER
M16*	FRASER
M17	MCCANN
M17*	MCCANN
M18	MACDONELL
M2	MACDONELL
M2*	MACDONELL
M2+	MACDONELL
M21	MACDONELL
M22	MACDONELL
M23	SCOTT
M23*	SCOTT
M24	FRASER
M24*	FRASER
M25	GRANT
M25*	GRANT
M26	FRASER
M26*	FRASER
M27	MCDONELL
M27*	MCDONELL
M3	MACDONELL
M3*	MACDONELL
M31	MACDONELL
M32	CHISHOLM
M32*	CHISHOLM
M33	MACDONELL
M4	MACDONELL
M4*	MACDONELL
M41	MACDONELL
M41*	MACDONELL
M411	MACDONELL
M412	MACDONELL
M42	BLACKLOCK
M42*	BLACKLOCK
M43	WALKER
M43*	WALKER
M5	MACDONELL
M6	MCLEOD
M6*	MCLEOD
M7	MACDONALD
M7*	MACDONALD
M8	FRASER
M8*	FRASER
M9	MCLEAN
M9*	MCLEAN
M91	MCLEAN
M92	MCLEAN
M93	MCLEAN
M94	FRASER
M94*	FRASER
M95	HOPPER
M95*	HOPPER
M96	MCGILLIVRAY
M96*	MCGILLIVRAY
M97	TREW
M97*	TREW
M98	MACDONELL

69 records.

Key	Surname	Given Names	Nee	G	B-Yr	MoDy	S	CtryS/P	City Born	D-Yr	MoDy	CtryS/P	City Died	Md#1	MoDy	T	Md#2	MoDy	T	Mail Addr#1	Mail City	Comments	Ref
M	MACDONELL	John		M	17xx	xxxx				18xx	xxxx			17xx	xxxx								42
M*	MACDONELL	Jane	CHISHOLM	F	17xx	xxxx				18xx	xxxx			17xx	xxxx								42
M1	MACDONELL	Archibald		M	17xx	xxxx				1xxx	xxxx			17xx	xxxx								42
M1*	MACDONELL	?	FRASER	F	17xx	xxxx				1xxx	xxxx			17xx	xxxx								42
M11	MACDONELL	John		M	17xx	xxxx				1xxx	xxxx												42
M12	MACDONELL	James (Capt)		M	17xx	xxxx				1xxx	xxxx	JAM											42
M13	MACDONELL	Mary	MACDONELL	F	17xx	xxxx				1xxx	xxxx			17xx	xxxx								42
M13*	MACDONELL	Donald Aeneas		M	17xx	xxxx				1xxx	xxxx			17xx	xxxx								42
M14	MACDONELL	Harriet	MACDONELL	F	17xx	xxxx				1xxx	xxxx			17xx	xxxx								42
M14*	MACDONELL	Duncan (Col)		M	17xx	xxxx				1xxx	xxxx			17xx	xxxx								42
M15	TREADWELL	Ellen	MACDONELL	F	17xx	xxxx				1xxx	xxxx			17xx	xxxx								42
M15*	TREADWELL	Charles P		M	17xx	xxxx				1xxx	xxxx			17xx	xxxx								42
M16	FRASER	Anne	MACDONELL	F	17xx	xxxx				1xxx	xxxx			17xx	xxxx								42
M16*	FRASER	Alexander (Col)		M	17xx	xxxx				1xxx	xxxx			17xx	xxxx								42
M17	MCCANN	Madeline	MACDONELL	F	17xx	xxxx				1xxx	xxxx			17xx	xxxx								42
M17*	MCCANN	?		M	17xx	xxxx				1xxx	xxxx			17xx	xxxx								42
M18	MACDONELL	son/daughter		?	17xx	xxxx				1xxx	xxxx												42
M2	MACDONELL	Allan (Capt Lt)		M	17xx	xxxx				1xxx	xxxx			17xx	xxxx		17xx	xxxx					42
M2*	MACDONELL	?	MACDONALD	F	17xx	xxxx				1xxx	xxxx			17xx	xxxx								42
M2+	MACDONELL	?	MACDONELL	F	17xx	xxxx				1xxx	xxxx			17xx	xxxx								42
M21	MACDONELL	James		M	17xx	xxxx				1xxx	xxxx												42
M22	MACDONELL	John		M	17xx	xxxx				1xxx	xxxx												42
M23	SCOTT	?	MACDONELL	F	17xx	xxxx				1xxx	xxxx			17xx	xxxx								42
M23*	SCOTT	William J (Dr)		M	17xx	xxxx				1xxx	xxxx			17xx	xxxx								42
M24	FRASER	?	MACDONELL	F	17xx	xxxx				1xxx	xxxx			17xx	xxxx								42
M24*	FRASER	Simon		M	17xx	xxxx				1xxx	xxxx			17xx	xxxx								42
M25	GRANT	?	MACDONELL	F	17xx	xxxx				1xxx	xxxx			17xx	xxxx								42
M25*	GRANT	?		M	17xx	xxxx				1xxx	xxxx			17xx	xxxx								42
M26	FRASER	Mary	MACDONELL	F	17xx	xxxx				1xxx	xxxx			17xx	xxxx								42
M26*	FRASER	Richard Duncan (Col)		M	17xx	xxxx				1xxx	xxxx			17xx	xxxx								42
M27	MCDONELL	Isabella	MACDONELL	F	17xx	xxxx				1xxx	xxxx			17xx	xxxx								42
M27*	MCDONELL	Angus		M	17xx	xxxx				1xxx	xxxx			17xx	xxxx								42
M3	MACDONELL	Alexander		M	17xx	xxxx				1xxx	xxxx			17xx	xxxx								42
M3*	MACDONELL	?	GRANT	F	17xx	xxxx				1xxx	xxxx			17xx	xxxx								42
M31	MACDONELL	Archy		M	17xx	xxxx				1xxx	xxxx												42
M32	CHISHOLM	?	MACDONELL	F	17xx	xxxx				1xxx	xxxx			17xx	xxxx								42
M32*	CHISHOLM	C (Col)		M	17xx	xxxx				1xxx	xxxx			17xx	xxxx								42
M33	MACDONELL	John		M	17xx	xxxx				1xxx	xxxx											Died of wounds	42
M4	MACDONELL	Ranald (Reginald?)		M	17xx	xxxx				1xxx	xxxx			17xx	xxxx								42
M4*	MACDONELL	?	ROBERTSON	F	17xx	xxxx				1xxx	xxxx			17xx	xxxx								42
M41	MACDONELL	Donald		M	17xx	xxxx				1xxx	xxxx			17xx	xxxx								42
M41*	MACDONELL	?	?	F	17xx	xxxx				1xxx	xxxx			17xx	xxxx								42
M411	MACDONELL	son		M	17xx	xxxx				1xxx	xxxx												42
M412	MACDONELL	Alister		M	17xx	xxxx				1xxx	xxxx												42
M42	BLACKLOCK	?	MACDONELL	F	17xx	xxxx				1xxx	xxxx			17xx	xxxx								42
M42*	BLACKLOCK	Ambrose		M	17xx	xxxx				1xxx	xxxx			17xx	xxxx								42
M43	WALKER	?	MACDONELL	F	17xx	xxxx				1xxx	xxxx			17xx	xxxx								42
M43*	WALKER	?		M	17xx	xxxx				1xxx	xxxx			17xx	xxxx								42
M5	MACDONELL	Roderick		M	17xx	xxxx				1xxx	xxxx											Priest	42
M6	MCLEOD	Catherine	MACDONELL	F	17xx	xxxx				1xxx	xxxx			17xx	xxxx								42
M6*	MCLEOD	William		M	17xx	xxxx				1xxx	xxxx			17xx	xxxx								42
M7	MACDONALD	Harriet	MACDONELL	F	17xx	xxxx				1xxx	xxxx			17xx	xxxx								42
M7*	MACDONALD	?		M	17xx	xxxx				1xxx	xxxx			17xx	xxxx								42
M8	FRASER	Mary	MACDONELL	F	17xx	xxxx				1xxx	xxxx			17xx	xxxx							No children	42
M8*	FRASER	Thomas (Col)		M	17xx	xxxx				1xxx	xxxx			17xx	xxxx							No children	42
M9	MCLEAN	Isabella	MACDONELL	F	17xx	xxxx				1xxx	xxxx			17xx	xxxx								42
M9*	MCLEAN	Neil (Col)		M	17xx	xxxx				1xxx	xxxx			17xx	xxxx								42
M91	MCLEAN	Archibald		M	17xx	xxxx				1xxx	xxxx												42
M92	MCLEAN	Alexander		M	17xx	xxxx				1xxx	xxxx												42
M93	MCLEAN	John		M	17xx	xxxx				1xxx	xxxx												42
M94	FRASER	?	MCLEAN	F	17xx	xxxx				1xxx	xxxx			17xx	xxxx								42
M94*	FRASER	?		M	17xx	xxxx				1xxx	xxxx			17xx	xxxx								42
M95	HOPPER	?	MACDONELL	F	17xx	xxxx				1xxx	xxxx			17xx	xxxx								42
M95*	HOPPER	?		M	17xx	xxxx				1xxx	xxxx			17xx	xxxx								42
M96	MCGILLIVRAY	?	MACDONELL	F	17xx	xxxx				1xxx	xxxx			17xx	xxxx								42
M96*	MCGILLIVRAY	?		M	17xx	xxxx				1xxx	xxxx			17xx	xxxx								42
M97	TREW	?	MACDONELL	F	17xx	xxxx				1xxx	xxxx			17xx	xxxx								42
M97*	TREW	?		M	17xx	xxxx				1xxx	xxxx			17xx	xxxx								42
M98	MACDONELL	Jessie		F	17xx	xxxx				1xxx	xxxx												42

69 records.

THESE #'s ARE UNRELATED TO GENERAL KEYS
COINCIDENT THAT THEY ARE SIMILAR

DATA FROM CENSUS OF

WORK			OCCUPATION	WHERE & WHEN BORN		EXTRACTION		
J1	JELLETT	Morgan	Lawyer	1834	ON	Irish	1871	D134D17
J1*	JELLETT	Sarah		1845	ON		1871	
J11	JELLETT	Ernest		1868	ON		1871	
J12	JELLETT	Charles		1868	ON		1871	
J13	JELLETT	Timothy		1871	ON		1871	
B1	BULL	Henry	Clerk	1827	QU	English	1871	
B1*	BULL	Charlotte		1843	ON		1871	
B11	BULL	E Mary		1866	ON		1871	
B12	BULL	E Laurie		1868	ON		1871	
B13	BULL	W Frederick		1871	ON		1871	
B4	BULL	Samuel	Merchant	1799	ON	English	1871	
B2	BULL	George	Carriage maker	1820	ON	English	1871	
B2*	BULL	Emma x		1830	ON		1871	MOTHERS
B21	BULL	Emma		1855	ON		1871	M-GM ?
B22	BULL	Eliza		1857	ON		1871	
B23	BULL	Solomon		1860	ON		1871	
* B3	BULL	John	Clerk	1834	QU	English	1871	
B3*	BULL	Sarah F		1841	QU		1871	
B31	BULL	Emily		1858	ON		1871	
B32	BULL	Maria M		1860	ON		1871	
B33	BULL	William A		1862	ON		1871	
B34	BULL	John		1865	ON		1871	
B35	BULL	Thomas S		1869	ON		1871	
B36	BULL	Edith M		1870	ON		1871	
B5	BULL	George L T	Land agent	1832	QU	English	1881	
B5*	BULL	Sarah M		1834	QU		1881	
B61	BULL	Maud		1846	ON		1881	
B62	BULL	Samuel J ?	Barrister	1841	QU		1881	
J2	JELLETT	John	Captain ?	1840	ON		1881	D134D19
J2*	JELLETT	Anna		1851	ON	Scotish	1881	
J21	JELLETT	Ethel		1875	ON		1881	
J22	JELLETT	John Jr		1878	ON		1881	
J23	JELLETT	Perry R ?		1879	ON		1881	
* B7	BULL	John		1834	ON		1881	
B7*	BULL	Sarah F		1840	ON		1881	
B71	BULL	Emily		1857	ON		1881	
B72	BULL	Maria ?		1859	ON		1881	
B73	BULL	William		1860	ON		1881	
B74	BULL	John Jr		1864	ON		1881	
B75	BULL	Thomas		1867	ON		1881	
B76	BULL	Edith		1870	ON		1881	
B77	BULL	Henry		1875	ON		1881	
B78	BULL	[son]		1877	ON		1881	
J3	JELLETT	Morgan	Lawyer	1836	ON	Irish	1881	
J3*	JELLETT	Sarah		1844	ON		1881	
J31	JELLETT	Harold		1868	ON		1881	?
J32	JELLETT	Ernest		1868	ON		1881	?
J33	JELLETT	Morgan		1877	ON		1881	
J34	JELLETT	Kathline		1874	ON		1881	
P1	PRINGLE	William	Carpenter	1855	ON	Scotish	1881	
P1*	PRINGLE	Jeminia		1856	ON		1881	
P11	PRINGLE	Gerty		1880	ON		1881	
P2	PRINGLE	Andrew	Carpenter	1818	ON	Scotish	1881	
P2*	PRINGLE	Jane		1823	ON		1881	

P21	PRINGLE	Maria		1847	ON		1881
P22	PRINGLE	John		1848	ON		1881
P23	PRINGLE	Eustis (?)		1851	ON		1881
P24	PRINGLE	Anne		1853	ON		1881
P25	PRINGLE	Hiram (?)		1857	ON		1881
P3	PRINGLE	David	Sailor	1837	ON		1891
P3*	PRINGLE	Annie		1842	ON		1891
P31	PRINGLE	David F	Hdwe clerk	1869	ON		1891
P32	PRINGLE	Mary		1871	ON		1891
P33	PRINGLE	Maud		1874	ON		1891
P34	PRINGLE	Agnes		1877	ON		1891
F1	FRALECK	E B	Judge	1841	ON	USA	1891
F1*	FRALECK	Jane		1850	ON	English	1891
F11	FRALECK	Ernest		1876	ON		1891
F12	FRALECK	Cecil		1877	ON		1891
F13	FRALECK	Madaline		1879	ON		1891
F14	FRALECK	Jessie		1881	ON		1891
F15	FRALECK	Hellen		1891	ON		1891
C1	COOK	William	Cheese buyer	1850	SCOT		1891
C1*	COOK	Bella		1853	SCOT		1891
C11	COOK	Jane JAMES		1875	ON		1891
C12	COOK	Bessie		1879	ON		1891
C13	COOK	William (Mud)		1882	ON		1891
C14	COOK	Mable		1886	ON		1891
P4	PRINGLE	Harry		1857	ON		1891
P4*	PRINGLE	Martha		1859	ON	USA	1891
P41	PRINGLE	Angus		1885	ON		1891
P42	PRINGLE	Habhie ?		1887	ON		1891
P5	PRINGLE	David	RR sec foreman	1843	ON		1891
P5*	PRINGLE	Adelia		1845	ON	Irish	1891
P51	PRINGLE	Habhie ?		1870	ON		1891
P52	PRINGLE	John		1878	ON		1891
P53	PRINGLE	Henry		1885	ON		1891
P6	PRINGLE	A N	Manufacturer	1818	ON		1891
P7	PRINGLE	CE	Carpenter	1853	ON		1891
B8	BULL	Samuel J	Lawyer	1835	QU		1891
B9	BULL	George L T		1831	QU		1891
B8*	BULL	Sarah M		1833	QU		1891
B81	BULL	Maud		1846	ON		1891
BA	BULL	Henry	Widower	1796	LC		1861
BA1	BULL	Gerorge	Single	1828	LC		1861
BA2	BULL	Samuel	Law student	1834	LC		1861
BA3	BULL	Sarah		1829	LC		1861
BA4	BULL	Caroline		1841	UC		1861
BA5	BULL	Maud		1845	UC		1861
J4	JELLETT	Robert P	Barrister	1826	IRE	Irish	1861
J4*	JELLETT	Catherine		1833	SCOT	Scotish	1861
J41	JELLETT	Rose		1857	UC		1861
J42	JELLETT	Robert xx Geo		1859	UC		1861
J4x	JELLETT	Morgan	Law student	1835	UC		1861
BB	BULL	Henry	(Madoc)	18xx			1861
P8	PRINGLE	Margaret	Widow	1793	UC		1861
P81	PRINGLE	Elizabeth		1836	UC		1861
P9	PRINGLE	A N	Carpenter	1818	UC		1861
P9*	PRINGLE	Jane		1821	UC		1861
P91	PRINGLE	Margaret		1842			1861

D134 D12

P92	PRINGLE	John N		1845	1861
P93	PRINGLE	Charles E		1850	1861
P94	PRINGLE	Ann Eliza		1852	1861
P95	PRINGLE	William		1854	1861
P96	PRINGLE	Henry		1857	1861
PA	PRINGLE	David	In goal (sgl)	1837 UC	1861

WORK

B1	BULL	Henry	Clerk	1827	QU	English	1871
B11	BULL	E Mary		1866	ON		1871
B12	BULL	E Laurie		1868	ON		1871
B13	BULL	W Frederick		1871	ON		1871
B1*	BULL	Charlotte		1843	ON		1871
B2	BULL	George	Carriage maker	1820	ON	English	1871
B21	BULL	Emma		1855	ON		1871
B22	BULL	Eliza		1857	ON		1871
B23	BULL	Solomon		1860	ON		1871
B2*	BULL	Emma x		1830	ON		1871
B3	BULL	John	Clerk	1834	QU	English	1871
B31	BULL	Emily		1858	ON		1871
B32	BULL	Maria M		1860	ON		1871
B33	BULL	William A		1862	ON		1871
B34	BULL	John		1865	ON		1871
B35	BULL	Thomas S		1869	ON		1871
B36	BULL	Edith M		1870	ON		1871
B3*	BULL	Sarah F		1841	QU		1871
B4	BULL	Samuel	Merchant	1799	ON	English	1871
B5	BULL	George L T	Land agent	1832	QU	English	1881
B5*	BULL	Sarah M		1834	QU		1881
B61	BULL	Maud		1846	ON		1881
B62	BULL	Samuel J ?	Barrister	1841	QU		1881
B7	BULL	John		1834	ON		1881
B71	BULL	Emily		1857	ON		1881
B72	BULL	Maria ?		1859	ON		1881
B73	BULL	William		1860	ON		1881
B74	BULL	John Jr		1864	ON		1881
B75	BULL	Thomas		1867	ON		1881
B76	BULL	Edith		1870	ON		1881
B77	BULL	Henry		1875	ON		1881
B78	BULL	[son]		1877	ON		1881
B7*	BULL	Sarah F		1840	ON		1881
B81	BULL	Maud		1846	ON		1891
B8*	BULL	Sarah M		1833	QU		1891
B9	BULL	George L T		1831	QU		1891
BA	BULL	Henry	Widower	1796	LC		1861
BA1	BULL	Gerorge	Single	1828	LC		1861
BA2	BULL	Samuel	Law student	1834	LC		1861
BA3	BULL	Sarah		1829	LC		1861
BA4	BULL	Caroline		1841	UC		1861
BA5	BULL	Maud		1845	UC		1861
BB	BULL	Henry	(Madoc)	18xx			1861
B~~*~~8	BULL	Samuel J	Lawyer	ok 18~~6~~4	QU		1891
C1	COOK	William	Cheese buyer	1850	SCOT		1891
C11	COOK	Jane		1875	ON		1891
C12	COOK	Bessie		1879	ON		1891
C13	COOK	William (Mud)		1882	ON		1891
C14	COOK	Mable		1886	ON		1891
C1*	COOK	Bella		1853	SCOT		1891
F1	FRALECK	E B	Judge	1841	ON	USA	1891
F11	FRALECK	Ernest		1876	ON		1891
F12	FRALECK	Cecil		1877	ON		1891
F13	FRALECK	Madaline		1879	ON		1891

F14	FRALECK	Jessie		1881	ON		1891
F15	FRALECK	Hellen		1891	ON		1891
F1*	FRALECK	Jane		1850	ON	English	1891
J1	JELLETT	Morgan	Lawyer	1834	ON	Irish	1871
J11	JELLETT	Ernest		1868	ON		1871
J12	JELLETT	Charles		1868	ON		1871
J13	JELLETT	Timothy		1871	ON		1871
J1*	JELLETT	Sarah		1845	ON		1871
J2	JELLETT	John	Captain ?	1840	ON		1881
J21	JELLETT	Ethel		1875	ON		1881
J22	JELLETT	John Jr		1878	ON		1881
J23	JELLETT	Perry R ?		1879	ON		1881
J2*	JELLETT	Anna		1851	ON	Scotish	1881
J3	JELLETT	Morgan	Lawyer	1836	ON	Irish	1881
J31	JELLETT	Harold		1868	ON		1881
J32	JELLETT	Ernest		1868	ON		1881
J33	JELLETT	Morgan		1877	ON		1881
J34	JELLETT	Kathline		1874	ON		1881
J3*	JELLETT	Sarah		1844	ON		1881
J4	JELLETT	Robert P	Barrister	1826	IRE	Irish	1861
J41	JELLETT	Rose		1857	UC		1861
J42	JELLETT	Robert xx Geo		1859	UC		1861
J4x	JELLETT	Morgan	Law student	1835	UC		1861
J4*	JELLETT	Catherine		1833	SCOT	Scotish	1861
P1	PRINGLE	William	Carpenter	1855	ON	Scotish	1881
P11	PRINGLE	Gerty		1880	ON		1881
P1*	PRINGLE	Jeminia		1856	ON		1881
P2	PRINGLE	Andrew	Carpenter/MFR	1818	ON	Scotish	1881/1891
P21	PRINGLE	Maria		1847	ON		1881
P22	PRINGLE	John		1848	ON		1881
P23	PRINGLE	Eustis (?)		1851	ON		1881
P24	PRINGLE	Anne		1853	ON		1881
P25	PRINGLE	Hiram (?)		1857	ON		1881
P2*	PRINGLE	Jane		1823	ON		1881
P3	PRINGLE	David	Sailor	1837	ON		1891
P31	PRINGLE	David F	Hdwe clerk	1869	ON		1891
P32	PRINGLE	Mary		1871	ON		1891
P33	PRINGLE	Maud		1874	ON		1891
P34	PRINGLE	Agnes		1877	ON		1891
P3*	PRINGLE	Annie		1842	ON		1891
P4	PRINGLE	Harry		1857	ON		1891
P41	PRINGLE	Angus		1885	ON		1891
P42	PRINGLE	Habhie ?		1887	ON		1891
P4*	PRINGLE	Martha		1859	ON	USA	1891
P5	PRINGLE	David	RR sec foreman	1843	ON		1891
P51	PRINGLE	Habhie ?		1870	ON		1891
P52	PRINGLE	John		1878	ON		1891
P53	PRINGLE	Henry		1885	ON		1891
P5*	PRINGLE	Adelia		1845	ON	Irish	1891
~~P6~~	~~PRINGLE~~	~~A N~~	~~Manufacturer~~	~~1818~~	~~ON~~		~~1891~~
P7	PRINGLE	CE	Carpenter	1853	ON		1891
P8	PRINGLE	Margaret	Widow	1793	UC		1861
P81	PRINGLE	Elizabeth		1836	UC		1861
P9	PRINGLE	A N	Carpenter	1818	UC		1861
P91	PRINGLE	Margaret		1842			1861
P92	PRINGLE	John N		1845			1861

P93	PRINGLE	Charles E		1850		1861
P94	PRINGLE	Ann Eliza		1852		1861
P95	PRINGLE	William		1854		1861
P96	PRINGLE	Henry		1857		1861
P9*	PRINGLE	Jane		1821	UC	1861
PA	PRINGLE	David	In goal (sgl)	1837	UC	1861

WORK

BB	BULL	Henry	(Madoc)	18xx			1861
P8	PRINGLE	Margaret	Widow	1793	UC		1861
BA	BULL	Henry	Widower	1796	LC		1861
B4	BULL	Samuel	Merchant	1799	ON	English	1871
P6	PRINGLE	A N	Manufacturer	1818	ON		1891
P2	PRINGLE	Andrew	Carpenter	1818	ON	Scotish	1881
P9	PRINGLE	A N	Carpenter	1818	UC		1861
B2	BULL	George	Carriage maker	1820	ON	English	1871
P9*	PRINGLE	Jane		1821	UC		1861
P2*	PRINGLE	Jane		1823	ON		1881
J4	JELLETT	Robert P	Barrister	1826	IRE	Irish	1861
B1	BULL	Henry	Clerk	1827	QU	English	1871
BA1	BULL	Gerorge	Single	1828	LC		1861
BA3	BULL	Sarah		1829	LC		1861
B2*	BULL	Emma x		1830	ON		1871
B9	BULL	George L T		1831	QU		1891
B5	BULL	George L T	Land agent	1832	QU	English	1881
B8*	BULL	Sarah M		1833	QU		1891
J4*	JELLETT	Catherine		1833	SCOT	Scotish	1861
B7	BULL	John		1834	ON		1881
BA2	BULL	Samuel	Law student	1834	LC		1861
B5*	BULL	Sarah M		1834	QU		1881
J1	JELLETT	Morgan	Lawyer	1834	ON	Irish	1871
B3	BULL	? John	Clerk	1834	QU	English	1871
J4x	JELLETT	Morgan	Law student	1835	UC		1861
B*	BULL	? Samuel J	Lawyer	1835	QU		1891
P81	PRINGLE	Elizabeth		1836	UC		1861
J3	JELLETT	Morgan	Lawyer	1836	ON	Irish	1881
P3	PRINGLE	David	Sailor	1837	ON		1891
PA	PRINGLE	David	In goal (sgl)	1837	UC		1861
B7*	BULL	Sarah F		1840	ON		1881
J2	JELLETT	John	Captain ?	1840	ON		1881
B62	BULL	Samuel J ?	Barrister	1841	QU		1881
B3*	BULL	Sarah F		1841	QU		1871
F1	FRALECK	E B	Judge	1841	ON	USA	1891
BA4	BULL	Caroline		1841	UC		1861
P3*	PRINGLE	Annie		1842	ON		1891
P91	PRINGLE	Margaret		1842			1861
B1*	BULL	Charlotte		1843	ON		1871
P5	PRINGLE	David	RR sec foreman	1843	ON		1891
J3*	JELLETT	Sarah		1844	ON		1881
J1*	JELLETT	Sarah		1845	ON		1871
P92	PRINGLE	John N		1845			1861
P5*	PRINGLE	Adelia		1845	ON	Irish	1891
BA5	BULL	Maud		1845	UC		1861
B81	BULL	Maud		1846	ON		1891
B61	BULL	Maud		1846	ON		1881
P21	PRINGLE	Maria		1847	ON		1881
P22	PRINGLE	John		1848	ON		1881
C1	COOK	William	Cheese buyer	1850	SCOT		1891
F1*	FRALECK	Jane		1850	ON	English	1891
P93	PRINGLE	Charles E		1850			1861
J2*	JELLETT	Anna		1851	ON	Scotish	1881
P23	PRINGLE	Eustis (?)		1851	ON		1881

P94	PRINGLE	Ann Eliza		1852			1861
C1*	COOK	Bella		1853	SCOT		1891
P7	PRINGLE	CE	Carpenter	1853	ON		1891
P24	PRINGLE	Anne		1853	ON		1881
P95	PRINGLE	William		1854			1861
B21	BULL	Emma		1855	ON		1871
P1	PRINGLE	William	Carpenter	1855	ON	Scotish	1881
P1*	PRINGLE	Jeminia		1856	ON		1881
B22	BULL	Eliza		1857	ON		1871
P25	PRINGLE	Hiram (?)		1857	ON		1881
J41	JELLETT	Rose		1857	UC		1861
P4	PRINGLE	Harry		1857	ON		1891
x B71	BULL	Emily	?	1857	ON		1881
P96	PRINGLE	Henry		1857			1861
x B31	BULL	Emily		1858	ON		1871
J42	JELLETT	Robert xx Geo		1859	UC		1861
x B72	BULL	Maria ?		1859	ON		1881
P4*	PRINGLE	Martha		1859	ON	USA	1891
x B32	BULL	Maria M		1860	ON		1871
x B73	BULL	William		1860	ON		1881
B23	BULL	Solomon		1860	ON		1871
x B33	BULL	William A		1862	ON		1871
B74	BULL	John Jr		1864	ON		1881
B34	BULL	John		1865	ON		1871
B11	BULL	E Mary		1866	ON		1871
B75	BULL	Thomas		1867	ON		1881
x J11	JELLETT	Ernest		1868	ON		1871
J12	JELLETT	Charles		1868	ON		1871
x J32	JELLETT	Ernest		1868	ON		1881
B12	BULL	E Laurie		1868	ON		1871
J31	JELLETT	Harold		1868	ON		1881
B35	BULL	Thomas S		1869	ON		1871
P31	PRINGLE	David F	Hdwe clerk	1869	ON		1891
B76	BULL	Edith		1870	ON		1881
B36	BULL	Edith M		1870	ON		1871
P51	PRINGLE	Habhie ?		1870	ON		1891
P32	PRINGLE	Mary		1871	ON		1891
J13	JELLETT	Timothy		1871	ON		1871
B13	BULL	W Frederick		1871	ON		1871
J34	JELLETT	Kathline		1874	ON		1881
P33	PRINGLE	Maud		1874	ON		1891
B77	BULL	Henry		1875	ON		1881
C11	COOK	Jane		1875	ON		1891
J21	JELLETT	Ethel		1875	ON		1881
F11	FRALECK	Ernest		1876	ON		1891
J33	JELLETT	Morgan — J11		1877	ON		1881
F12	FRALECK	Cecil		1877	ON		1891
B78	BULL	[son]		1877	ON		1881
P34	PRINGLE	Agnes		1877	ON		1891
P52	PRINGLE	John		1878	ON		1891
J22	JELLETT	John Jr		1878	ON		1881
F13	FRALECK	Madaline		1879	ON		1891
C12	COOK	Bessie		1879	ON		1891
J23	JELLETT	Perry R ?		1879	ON		1881
P11	PRINGLE	Gerty		1880	ON		1881
F14	FRALECK	Jessie		1881	ON		1891

C13	COOK	William (Mud)	1882	ON	1891
P41	PRINGLE	Angus	1885	ON	1891
P53	PRINGLE	Henry	1885	ON	1891
C14	COOK	Mable	1886	ON	1891
P42	PRINGLE	Habhie ?	1887	ON	1891
F15	FRALECK	Hellen	1891	ON	1891

7/24/91

	MORGAN SELLETT C9991-92	ONT	33	1834	Irish LAWYER	1871
*	SARAH	ONT	22	1845		
1	ERNEST	ONT	3	1868		
2	CHARLES	ONT	3	1868		
3	TIMOTHY	ONT	1/12 (MAR) 1871			
	HENRY BULL	QUE	44	1827	ENGLISH	CLERK
*	CHARLOTTE	ONT	28	1843		
1	E. MARY	✓	5	1866		
✓	E LAURIE	✓	3	1868		
3	W. FREDERICK	✓	JULY	1871		
	SAMUEL BULL	ONT	72	1799	ENGLISH	MERCHANT
	GEORGE BULL	ONT	51	1820	ENGLISH	CARRIAGEMKR
*	EMMA X?		41	1830		
1	EMMA		16	1855		
2	ELIZA		14	1857		
3	SOLOMON		11	1860		
	JOHN BULL	QUE	37	1834	ENGLISH	CLERK
*	SARAH F.	✓	30	1841		
	EMILY	ONT	13	1858		
32	MARIA M.	✓	11	1860		
33	WILLIAM A.	✓	9	1862		
334	JOHN		6	1865		
335	THOMAS S		4	1869		
336	EDITH M		1	1870		

7/20/91

1881

35	GEORGE L.T. BULL	QUE	49	1832	ENGLISH LAND AGENT
35*	SARAH M.	✓	47	1834	
361	MAUD	ONT	35	1846	
362	SAMUEL J(?)	QUE	40	1841	BARRISTER

J2	JOHN JELLETT	ONT	41	1840	CAPTAIN ?
J2*	ANNA		30	1851	SCOTTISH
J21	ETHEL		6	1875	
J22	JOHN JR		3	1878	
J23	PERRY R. (?)		2	1879	

B7	JOHN BULL		47	1834
B7*	SARAH F		41	1840
B71	EMILY		24	1857
B72	MARIA ?		22	1859
B73	WILLIAM		21	1860
B74	JOHN		17	1864
B75	THOMAS		14	1867
B76	EDITH		11	1870
B77	HENRY		6	1875
B78	? [M]		4	1877

J3	MORGAN JELLETT	ONT	45	1836	IRISH LAWYER
J3*	SARAH	✓	33	1844	
J31	HAROLD		13	1868	
J32	ERNEST		13	1868	
J34	MORGAN		4	1877	
J33	KATHLINE		7	1874	
J35	S.M.I.			1882	

1881

P1	WILLIAM PRINGLE	ONT	>6	1855	SCOTISH		CARPENTER
P1*	JEMINIA		>5	1856			
P11	GIRTY		1	1880			
P2	ANDREW PRINGLE	ONT	63	1818	✓		✓
P2*	JANE		58	1823			
P21	MARIA		34	1847			
P22	JOHN		32	1849			
P23	EUSTIS (?)		30	1851			
P24	ANNE		>8	1853			
P25	HAM (?) HIRAM? [M]		24	1857			

1891

					PARENTS (F)	PARENTS (M)	
P3	DAVID PRINGLE	ON	54	1837	ON	ON	SAILOR
P3*	ANNIE		49	1842			
P31	DAVID F.		>2	1869			HONECLK
P32	MARY		>0	1871			
P33	MAUD		17	1874			
P34	AGNES		14	1877			
F1	E.B. FRALICK	ON	50	1841	US	ON	b. 2/6/1841
F1*	JANE		41	1850	ENG	✓	
F11	ERNEST		15	1876			
F12	CECIL		14	1877			b. 1/14/xx
F13	MADELINE		12	1879			
F14	JESSIE		10	1881			b. 2/1/xx
F15	HELLEN		6/12	1891			b. 10/14/xx

— 1891 —

11	WILLIAM COOK	SCOT.	41	1850	SCOT	SCOT	CHEESE BUYER
11*	BELLA	✓	38	1853			
11	JANE	ON	16	1875			
12	BESSIE	✓	12	1879			
13	WILLIAM	✓	9	1882			
14	MABLE	✓	5	1886			
4	HARRY PRINGLE	ON	34	1857	ON	ON	
4*	MARTHA	ON	32	1859	US	US	
41	ANGUS	✓	6	1885			
42	HAB.(?) HIE	✓	4	1887			
5	DAVID PRINGLE	ON	48	1843	ON	ON	L&P SEC/TRM
5*	ABELIA		46	1845	IRE		
51	HARRIE		21	1870	ON		
52	JOHN		13	1878			
53	HENRY		5	1885			
6	A.N. PRINGLE		73	1818	ON	ON	MFR
7	C.E.		38	1853			CARPENTER
8	SAMUEL J BELL	QUE	56	1835	QU.	QU	LAWYER
9	GEORGE L.T.	✓	60	1831	✓	✓	
9*	SARAH M	✓	58	1833	✓	✓	
9	MAUD	ONT	45	1846	✓	✓	

7/24/91

1861

	HENRY BULL	L.C.	65	1796 WIDOWER	
	GEO ✓	✓	33	1828 SGL	
	SAMUEL	✓	27	1834 "	LAW STUDENT
	SARAH	✓	32	1829 "	
	CAROLINE	U.C.	20	1841 "	
	MARY	✓	16	1845	
	ROBERT P. JELLETT	IRE.	35	1826	BARRISTER
	CATHERINE	SCOT	28	1833	
	ROSE	U.C.	4	1857	
	ROBT -- GEORGE	✓	2	1859	
	MORGAN	✓	26	1835 SGL	LAW STUDENT
	HENRY BULL (MASOC)				
	MARGARET PRINGLE	UC	68	1793 WIDOW	
	ELIZABETH ✓	✓	25	1836 SGL	
	A.N. PRINGLE	UC	43	1818	CARPENTER
	JANE	✓	40	1821	
	MARGARET		19	1842	
	JOHN N.		16	1845	
	CHARLES E.		11	1850	
	ANN ELIZA		9	1852	
	WILLIAM		7	1854	
	HENRY		4	1857	
	DAVID PRINGLE	UC	24	1837 SGL	(IN GOAL)

BUELL, William (JR) L1878 #LG1-10
BUELL, Wm L1792 #OX1-6
BUFFAIN, Geo L1880 #LR1-39
BUFFALO, Montague (FAR)(MAP) L1877 #HA4-30
BUFFAM, George B1828(ENG) L1845 #LR1-43
BUFFAM, George B1828(ENG) L1845(CAN) #LR1-43
BUFFELAND, James(UEL) L17-- #ONT12-286
BUFFON, L16-- #ONT7-5
BUFFORD, Henry L1877 #LM1-50
BUFFY, M L L1881 #EL1-123
BUFFY, M L L1883 #EL1-124
BUFFY, William L1837 #PL4-75
BUFFY, William L1834 #PL5-85
BUFTEN, Charles L1845 #LW2-84
BUFTON, A L1879 #CL1-19
BUGG, John L1837 #YO1-83
BUGG, Wm L1879 #PT1-44
BUGGAN, (REL) L1874 #VO4-121
BUGGY, John L1890 #SI4-91
BUGGY, John (JR) L1890 #SI4-91
BUGHES, Wm L1884 #KT1-90
BUGNER, Henry L1875 #WT1-45
BUGNER, Henry L1884 #WT1-53
BUIE, A L L1890 #SI4-91
BUIE, Angus L1867 #BU1-68
BUIE, Angus L1890 #SI4-91
BUIE, Angus (JR) (FAR) L1890 #SI4-93
BUIE, Angus (SR) (FAR) L1890 #SI4-93
BUIE, Arch (FAR) L1890 #SI4-93
BUIE, Arch (JR) L1890 #GY1-47
BUIE, Archibald L1867 #BU1-68
BUIE, Archibald (SR) L1890 #GY1-47
BUIE, Donald L1890 #GY1-41
BUIE, Donald (FAR) L1890 #SI4-93
BUIE, James L1890 #SI4-91
BUIE, James (FAR) L1890 #SI4-93
BUIE, John L1890 #GY1-47
BUIE, John L1890 #SI4-91
BUIE, Lachlan L1890 #GY1-47
BUIE, Neil L1890 #GY1-41
BUILANE(?), Margaret B1836(IRE) L1851 #VO5-4
BUILDER, John L1872 #BR1-67
BUILLOD, Edwd L1879 #MP1-98
BUISLAND, Peter L1871 #WE1-215
BUISSET, Luc L1678 #ONT10-501
BUIST, (MRS) L1878 #LG1-75
BUIST, Clara L1886 #DD2-154
BUIST, D E L1890 #SI4-91
BUIST, John L1884 #KT1-91
BUIST, R L1857 #DD2-52
BUIST, R L1904 #DD2-392
BUIST, Wm L1884 #KT1-91
BUKE, F L1875 #BR1-75
BUKER, H L1879 #MP1-61
BUKER, H L1878 #LG1-65
BUKER, Hiram L1878 #LG1-5,64
BUKER, John(UEL) L17-- #ONT12-285
BUKER, N L1878 #LG1-60
BUKER, T L1878 #LG1-61
BULFIN, (MRS) L1878 #LG1-74
BULGAR, James L1871 #WE1-215
BULGAR, Jno L1879 #HU1-56
BULGAR, Martin L1851 #RE2-4
BULGAR, Martin L1851 #RE3-2
BULGER, (MRS) L1930 #CL2-20
BULGER, Bridget (MRS) L1871 #WE1-27
BULGER, Daniel (FAR) L1851 #RE14-3
BULGER, David (FAR) L1851 #RE14-3
BULGER, J L1878 #LG1-20
BULGER, James L1890 #GY1-47
BULGER, James L1837 #YO1-85
BULGER, Jas L1879 #HU1-38
BULGER, Jno L1879 #CL1-14
BULGER, John L1843 #HU1-19
BULGER, Jos L1879 #HU1-56
BULGER, M L1878 #LG1-48
BULGER, Martin L1867 #BU1-32
BULGER, Martin L1890 #GY1-47
BULGER, P (MRS) L1878 #LG1-68
BULGER, Patrick L1871 #WE1-27
BULGER, Saml (LUM) L1851 #RE8-10
BULGER, W L1878 #LG1-72
BULKLEY, L1878 #DN1-74
BULKLEY, M L1878 #DN1-49,74
BULKLEY, W A L1878 #DN1-49,74
BULL, L1875 #WT1-25
BULL, L1825 #PL6-5
BULL, (ESTATE) L1878 #YO1-18
BULL, A L1878 #DN1-56
BULL, Aaron(UEL) L17-- #ONT12-287
BULL, Anne M1835 #ONT21-30
BULL, B E (LAW) L1916 #ONT14-463
BULL, Bartholomew L1837 #YO1-88
BULL, Bartlet L1878 #YO1-15
BULL, Bartlett L1878 #YO1-15
BULL, Berar(UEL) L1795 #ONT12-146
BULL, Cory S L1851 #PE1-50,168

BULL, D L1878 #DN1-56
BULL, Daniel L1878 #DN1-56
BULL, David L1833 #DN1-108
BULL, Edward L1837 #YO1-83
BULL, F A L1875 #WT1-25
BULL, G E L1878 #DN1-55
BULL, Geo (LAW) L1916 #ONT14-459
BULL, Henry L1890 #GY1-40
BULL, Henry L1878 #LG1-63
BULL, Hiram L1851 #PE1-60
BULL, J L1875 #WT1-25
BULL, J L1878 #DN1-82
BULL, J H L1878 #YO1-18
BULL, Jno L1879 #MP1-49
BULL, John L1877 #LM1-49
BULL, John L1851 #PE1-43
BULL, John L1837 #YO1-88
BULL, John (AD) L18-- #BU1-1B
BULL, John E L1878 #YO1-14
BULL, John P L1878 #YO1-14,15
BULL, John R L1878 #YO1-18
BULL, Joseph L1877 #LM1-49
BULL, Josiah L17-- #ONT18-210
BULL, Josiah L1851 #PE1-60
BULL, Margaret(UEL) L1807 #ONT12-146
BULL, Maturah L1792C #ONT18-210
BULL, O A L1878 #DN1-82
BULL, R L1878 #YO1-6
BULL, Richard L1875 #WT1-66
BULL, Richd L1875 #WT1-70
BULL, Robert L1878 #YO1-14,15
BULL, S L1878 #DN1-56
BULL, Stephen L1878 #DN1-56
BULL, Stephen L1872 #EL2-60
BULL, Stephen M1832 #ONT21-49
BULL, Stephen L1851 #PE1-60
BULL, T P L1868 #HU1-10
BULL, Thomas L1837 #YO1-88
BULL, William L1850 #PT1-XIX
BULL, William L1867 #BU1-51,158
BULL, Wm L1840 #LW2-85
BULL, Wm (TCR) L1867 #BU1-207
BULL, Zebedee L1877 #LM1-49
BULLAR, T L1878 #LG1-61
BULLARD, Edward L1867 #BU1-74
BULLARD, J L1878 #LG1-73
BULLARD, John L1838 #HU1-89
BULLARD, Joseph L1867 #BU1-74
BULLARD, W L1878 #LG1-73
BULLAUGH, J L1879 #HU1-57
BULLEN, (MAJ) L1821 #MX1-10
BULLEN, C F L1870 #WT1-51
BULLEN, H H L1879 #MP1-63
BULLEN, John L1837 #YO1-83
BULLEN, R L1879 #HU1-47
BULLEN, S J F L1877 #MX1-73
BULLEN, S J Fitz L1835 #A1-27
BULLEN, W F L1870 #A1-21
BULLEN, W F (MR) (LB) L1865 #ONT23-343,430,536
BULLER, C G L1878 #DN1-58
BULLER, Charles L1843 #GL2-317
BULLER, Charles L1878 #LG1-20
BULLER, Charles George M1834 #ONT21-72
BULLER, D J L1875 #WT1-49
BULLER, Geo L1877 #NF1-27
BULLER, Henry L1884 #KT1-94
BULLER, J L1875 #WT1-50
BULLER, Jas L1884 #KT1-94
BULLER, Johathan L1884 #KT1-93
BULLER, John L1875 #BR1-37
BULLER, John L1884 #KT1-94
BULLER, Jonathan L1884 #KT1-94
BULLER, Robt L1884 #KT1-94
BULLER, Sam L1876 #OX1-40
BULLER, T L1875 #WT1-49
BULLER, Thos L1884 #KT1-94
BULLERD, Thomas L1852 #DN1-105
BULLEVANT, William L1872 #HL1-71
BULLEYMENT, Thomas L1873 #PL5-88
BULLIED, John L1867 #PT2-124
BULLIED, Richard L1869 #PB2-124
BULLIED, Thomas(SR) L1869 #PB2-124
BULLIS, Frank R L1904 #DD2-359
BULLIS, H F L1878 #DN1-49
BULLIS, H F L1878 #LG1-73
BULLIS, J L1878 #LG1-36
BULLIS, James L1874 #DD2-51
BULLIS, James L1904 #DD2-359
BULLIS, Jeremiah M1835 #ONT21-84
BULLIS, John L1812 #CL1-XL
BULLIS, Jos L1884 #KT1-96
BULLIS, O F L1878 #LG1-36
BULLIS, P L1878 #LG1-27,68,69
BULLIS, Wm L1796 #CL1-XL
BULLIS, Wm (JR) L1812 #CL1-XL
BULLIVANT, Ann L1876 #LW2-42
BULLIVANT, Francis L1876 #LW2-42

BULLIV
BULLIV
BULLIV
BULLM
BULLM
BULLOC
BULLOC
BULLOC
BULLOC
BULLOC
BULLOC
BULLOC
BULLOC
BULLOC
BULLOC
BULLOC
BULLOC
BULLOC
BULLOC
BULLOC
BULLOC
BULLOC
BULLOC
BULLOC
BULLOC
BULLOC
BULLOC
BULLOC
BULLOC
BULLOC
BULLOC
BULLOC
BULLOC
BULLOC
BULLOC
BULLOC
BULLOC
BULLOC
BULLOC
BULLY,
BULLY,
BULMAN
BULMAN
BULMER
BULMER
BULMER
BULMER
BULMER
BULMER
BULMER
BULMER
BULMER
BULMER
BULMER
BULMER
BULMER
BULSON
BULSON
BULSON
BULSON
BULSTE
BULSTE
BULTER
BULYEA
BULYEA
BULYEA
BUMB,
BUMB,
BUMBY,
BUMER
BUMP,
BUMP,
BUMP,
BUMP,
BUMSTE
BUMSTE
BUMSTE
BUMSTE
BUMSTE
BUMSTE
BUMSTE
BUMSTE
BUMSTE
BUMSTE
BUN,
BUNBU
BUNBU
BUNCE
BUNCE
BUNDY
BUNDY
BUNDY
BUNDY
BUNDY
BUNDY

IANSON, Anthony L1877 #HA4-25
IANSON, James L1877 #HA4-24,25
IANSON, John L1878 #YO1-35,38
IANSON, Thomas L1873 #YO1-38
IANSON, William L1878 #YO1-15,35
IBBITSON, (LT) #XLV
IBBITSON, (LT) L1824 #XLV
IBBOTSON, Benj L1879 #MP1-73
IBBOTSON, John L1872 #EL2-62
IBBOTSON, Robert L1871 #WE1-159
ICE, (REL) L18-- #ONT3-285
ICHELDINGER, Michael L1890 #GY1-40
ICKLER, Peter L1890 #GY1-40
ICTOWEKESIS, (IND)(CHF) L1850(AL) #CDA5-505
IDA, W L1876 #OX1-24
IDAIR, John L1872 #EL2-63
IDEN, George L1877 #LM1-49
IDINGTON, L1868C #PT1-XXIII
IDINGTON, J L1879 #PT1-23
IDINGTON, John L1879 #PT1-IV
IDINGTON, Peter L1877 #WO1-32
IDINGTON, Walter L1877 #WO1-32
IDINGTON, Walter (MAP) L1881 #WO1-23
IDLE, Thomas L1890 #GY1-41
IDOWEKESIS, (IND)(CHF) L1850(AL) #CDA5-506
IESS, Jacob L1875 #DD1-427
IESS, Jacob D1875 #DD2-427
IGGARD, Albert L1867 #BU1-107
IGNACE, Mary Anne L1871 #NP12-1
IGNATIUS, L16-- #ONT7-8
IGNATIUS, #ONT7-18,21
IGOE, L1866 #DD2-251
ILAND, George L1871 #WE1-137
ILAND, Michael L1855 #SM1-49
ILARD, James(UEL) L17-- #ONT12-304
ILER, L1782 #ONT18-204
ILER, Adam L1883 #ES1-27
ILER, Alanson L1883 #ES1-27
ILER, Andrew L1883 #ES1-27
ILER, Charles L1883 #ES1-27
ILER, J C L1883 #ES1-27
ILER, Jacob L1883 #ES1-27
ILER, Jacob L1790 #ONT18-74
ILER, James L1883 #ES1-27
ILER, Leonard L1883 #ES1-27
ILER, Peter L1883 #ES1-27
ILER, Richard L1883 #ES1-27
ILER, Richardson L1883 #ES1-27
ILER, S F L1883 #ES1-27
ILER, Samuel L1883 #ES1-27
ILER, Solomon L1883 #ES1-27
ILES, Henry L1871 #WE1-165
ILES, James L1871 #WE1-195
ILES, John L1871 #WE1-233
ILES, John (MR) (LB) L1865 #ONT23-101,462
ILES, Thos (FAR) (MAP) L1877 #HA4-40
ILLENBRUNN, Bernhard L1877 #WO1-35
ILLING, F O L1877 #WO1-43
ILLINGWORTH, Wm L1877 #WO1-35
ILLMAN, Benj L1884 #KT1-97
ILLMAN, Wm L1884 #KT1-97
IMBERT, Simon L1608 #ONT7-34
IMENDOL, Christian(UEL) L1786 #ONT12-197
IMENDOL, Christopher(UEL) L1786 #ONT12-197
IMERSON, Margaret Cullen B1842 D1875 #LK4-15
IMESON, C J L1883 #ES1-29
IMESON, Charles B1803(ENG) L1816(CAN) #LR1-44
IMESON, Chas L1880 #LR1-38
IMESON, David L1883 #ES1-29
IMESON, David L1884 #KT1-97
IMESON, Gaines L1883 #ES1-29
IMESON, Gains L1884 #KT1-97
IMESON, John L1883 #ES1-29
IMESON, John L1884 #KT1-97
IMESON, Joseph L1883 #ES1-29
IMESON, Sarah D B1859C D1889 #LK4-10
IMESON, T L1878 #LG1-18
IMESON, William G B1848C D1889 #LK4-10
IMESON, Wm L1883 #ES1-29
IMLAY, Alexander L1877 #WO1-32
IMLAY, J L1862 #CL2-38
IMMEL, Adam L1890 #GY1-46
IMMEL, Geo L1877 #NF1-39
IMMEL, Geo (FAR) (MAP) L1877 #HA4-95
IMMEL, H L1877 #NF1-39
IMMEL, H (FAR) (MAP) L1877 #HA4-95
IMPEY, Adam (LR) L1786 #OE1-408
IMPEY, Christopher (LR) L1786 #OE1-406
IMPEY, Henry (LR) L1786 #OE1-407
IMPEY, I (MIL) (LR) L1786 #OE1-408
IMPEY, J (MIL) (LR) L1786 #OE1-408,409
IMPEY, Jacob (LR) L1786 #OE1-406
IMPEY, Phil (LR) L1786 #OE1-406
IMPEY, Phil (SR) (LR) L1786 #OE1-406
IMPEY, Will (LR) L1786 #OE1-406
IMPEY, Wm (LR) L1786 #OE1-408
IMPEY, Wm (SR) (FAM) L1786 #OE1-408
IMPEY, Wm (SR) (FAM) (LR) L1786 #OE1-408
IMRIE, G H L1888 #VO9-152
IMRIE, J L1877 #ON1-41
IMRIE, J L1876 #OX1-41
IMRIE, J L1878 #LG1-56
IMRIE, James L1884 #KT1-97
IMRIE, James L1878 #LG1-59
IMRIE, Jas L1876 #OX1-41
IMRIE, Jno L1879 #HU1-67
IMRIE, John L18-- #VO1-106
IMRIE, Thos L1884 #KT1-97
IMRIE, W H L1878 #LG1-59
IMRIE, William Beck (PTM) L1851(GR) #CDA5-485
INCE, Henry J L1877 #HA4-40
INCE, J L1878 #YO1-14,44
INCE, Richard (FAR) (MAP) L1877 #HA4-46
INCE, T H L1878 #YO1-35
INCE, Thomas Henry L1878 #YO1-6
INCE, Thomas Henry (PAT) L1865 #ONT8-90
INCE, Thomas Henry (PAT) L1867 #ONT8-108
INCE, Thomas Henry (PAT) L1868 #ONT8-116,120
INCE, William (AD) L18-- #BU1-210
INCH, Adam L1875 #WT1-25
INCH, Charles L1871 #WE1-83
INCH, F L1878 #DN1-5
INCH, Francis L1877 #MX1-51
INCH, Frank L1878 #DN1-114
INCH, Js B1839(ENG) L1861 #VO3-7
INCH, N B1828(ENG) L1861 #VO3-7
INCH, Richard L1877 #MX1-51
INCH, Richard L1868 #A1-28
INCH, Silas (MR) (LB) L1865 #ONT23-187
INCH, William L1842 #DN1-114
INCH, William (LAB) L1871 #HA4-4
INCH, Wm L1879 #MP1-61
INCH, Wm L1878 #DN1-5,59
INCHES, Chas (SR) L1884 #KT1-94
INCHES, Geo L1877 #MX1-70
INCHES, John L1877 #MX1-70
INCHES, T L1877 #MX1-70
INDOE, Aaron L1867 #BU1-133
INDOE, William M L1859 #VO9-13
ING, Henry L1872 #WT1-51
INGALLS, (LT) L1815 #ONT17-59
INGALLS, (LT) L18-- #ONT3-59
INGALLS, Otis L1884 #KT1-90
INGAMELLS, J B L1878 #MX1-12
INGAMELLS, J B L1854 #A1-26
INGAMELLS, P C (MIL) L1899(MX) #ONT28-471
INGEL, Christian L1890 #GY1-49
INGEL, Joseph L1890 #GY1-49
INGERSOL, L1804 #KT2-33
INGERSOL, Samuel L1855 #SM1-48
INGERSOL, Thomas L1867 #BU1-91
INGERSOLL, L1876 #OX1-6
INGERSOLL, L1812 #OX1-10
INGERSOLL, L17-- #ONT3-9
INGERSOLL, (COL) L1812 #PT1-X
INGERSOLL, (COL) L1815 #PT1-X
INGERSOLL, (MR) L1845 #PT1-X
INGERSOLL, Chas L1824 #OX1-6
INGERSOLL, J H (LAW) L1916 #ONT14-461
INGERSOLL, James L1841 #PT1-X

KETTLEWELL, Wm L1877 #MX1-72
KEVANER, Frederick L1878 #FLA1-37
KEVILL, James (PTM) L1851(ES) #CDA5-474
KE VILLE, P L1876 #LW2-45
KEVINGTON, W W L1877 #MX1-74
KEW, L1859 #A1-21
KEW, H L1875 #BR1-83
KEW, J L1876 #LW2-24
KEW, Jas L1876 #OX1-20
KEW, John Wm L1876 #LW2-32
KEW, Sharon L1965 #MX2-130
KEW, Wm L L1876 #LW2-32
KEWAN, Robert L1837 #YO1-84
KEWIN, (MRS) L1879 #ONT22-18
KEWIN, D S L1832 #DN1-113
KEWIN, J L1878 #DN1-39
KEWIN, James L1832 #DN1-113
KEWIN, James (SR) L1878 #DN1-82
KEWLEY, James L1877 #LM1-52
KEWORTH, Wm L1837 #YO1-87
KEWORTH, Wm (SR) L1837 #YO1-87
KEY, L1875 #BR1-87
KEY, Adam L1877 #WO1-32
KEY, Benj L1877 #NF1-27
KEY, Benj (FAR)(MAP) L1877 #HA4-87
KEY, Charles (FAR) L1890 #SI4-92
KEY, G L1875 #BR1-87
KEY, G B (MR) (LB) L1865 #ONT23-10
KEY, H (MR) (LB) L1865 #ONT23-10
KEY, Helen M1833 #ONT21-40
KEY, Jno L1877 #NF1-27
KEY, John (FAR) L1890 #SI4-92
KEY, Joseph L1890 #GY1-43
KEY, Joseph L1837 #PL4-76
KEY, M L1856 #ON1-74
KEY, P L1875 #BR1-87
KEY, Robert L1890 #GY1-47
KEY, Wm L1876 #OX1-7
KEY, Wm L1875 #BR1-87
KEY, Wm L1871 #WE1-191
KEYAND, John L1890 #GY1-44
KEYES, L1868 #PT1-IV
KEYES, L1869 #PT1-IV
KEYES, (MR) L1877 #PT1-IV
KEYES, (MR) L1878 #PT1-IV
KEYES, Elwood (DR) B1887(CAN) L1910 #VO2-302
KEYES, G L1884 #DD2-173
KEYES, Geo L1879 #CL1-24
KEYES, George L1871 #WE1-180
KEYES, Henry L1877 #MX1-46
KEYES, J Ellwood (DR) B1887(CAN) #VO4-138
KEYES, James L1857 #ONT22-59
KEYES, James L1879 #DD2-28
KEYES, James (LAW) L1916 #ONT14-461
KEYES, Joseph (FAR) L1851 #RE9-5
KEYES, N L1879 #CL1-28
KEYES, R L1879 #PT1-19
KEYES, R L1866 #PT1-IV
KEYES, R L1867 #PT1-IV
KEYES, Robert L1856 #PT1-65
KEYES, Robert L1866 #PT1-XIX
KEYES, Robert (PH) L1879 #PT1-50
KEYES, T O (MRS) L1900 #DD2-184
KEYES, Thomas M1850 #LW2-21
KEYES, Thomas L1876 #LW2-21
KEYES, Thomas L1849 #LW2-83
KEYES, Thomas (PH) L1876 #LW2-44
KEYES, Thos L1876 #LW2-42
KEYES, Thos (PH) L1876 #LW2-44
KEYES, Tom L1905 #CL2-18
KEYES, William (AD) L18-- #BU1-153
KEYHOE, Michael L1878 #FLA1-71
KEYHOE, Patrick L1837 #PL4-75
KEYLAND, John (JR) L1890 #GY1-44
KEYLAND, Wm L1890 #GY1-44
KEYLER, Chas L1878 #FLA1-78
KEYLER, F G L1878 #FLA1-78
KEYS, (MRS) L18-- #VO4-208
KEYS, (MRS) L1872 #VO9-259
KEYS, Andrew L1879 #HU1-71
KEYS, C O L1884 #KT1-95
KEYS, Chas L1878 #FLA1-100
KEYS, Corlis L1884 #KT1-95
KEYS, Danl L1877(MAP) #HA4-25
KEYS, E L1878 #LG1-30
KEYS, Etta L1889 #VO9-254,255
KEYS, F B (REL) L1950 #ONT13-301
KEYS, G L1879 #DD2-27
KEYS, George L1904 #DD2-61
KEYS, George L1867 #BU1-63
KEYS, George L1878 #FLA1-57
KEYS, George L1865 #GY2-572
KEYS, H L1879 #HU1-43
KEYS, Isaac L1871 #WE1-166
KEYS, J L1879 #DD2-27,28
KEYS, James L1871 #WE1-139
KEYS, Jas L1879 #DD2-27
KEYS, Jno L1879 #DD2-27
KEYS, John L1879 #DD2-28
KEYS, John L1904 #DD2-393
KEYS, John L1830 #DD2-431
KEYS, John L1876 #HU1-14
KEYS, John L1877 #HU1-14
KEYS, John L1878 #FLA1-56,103
KEYS, John L1865 #GY2-572
KEYS, John (SR) L1879 #DD2-28
KEYS, Joseph L1867 #BU1-160
KEYS, Joseph L1878 #FLA1-53
KEYS, M L1878 #FLA1-53
KEYS, M J L1893 #DD2-149
KEYS, Mrs L1877(MAP) #HA4-25
KEYS, Oliver #DD2-331
KEYS, Patrick L1878 #FLA1-53,100
KEYS, Robert L1890 #GY1-49
KEYS, Robert L1871 #WE1-154
KEYS, Robt L1879 #HU1-71
KEYS, Rufus L1893 #DD2-149
KEYS, Samuel L1891 #DD2-154
KEYS, Samuel L1871 #WE1-154
KEYS, T O #DD2-329
KEYS, Thomas L1877 #VO4-26
KEYS, Thomas L1880 #VO4-26
KEYS, Thomas L1879 #DD2-29
KEYS, Thomas L1878 #FLA1-57
KEYS, Thomas L1878 #LG1-49
KEYS, Thomas L1871 #LK3-8
KEYS, Thomas (JR) L1878 #FLA1-57
KEYS, Thos L1879 #HU1-71,82
KEYS, W S L1876 #OX1-35
KEYS, W S (MRS) L1876 #OX1-35
KEYS, William L18-- #VO9-259
KEYS, William L1840 #DD2-52
KEYS, William L1867 #BU1-151,160
KEYS, William L1878 #FLA1-57,103
KEYS, William L1865 #GY2-572
KEYS, Wm L1879 #DD2-29
KEYS, Wm L1875 #HU1-20
KEYS, Wm L1879 #HU1-71
KEYS, Wm L1883 #ES1-27
KEYS, Wm L L1879 #HU1-71
KEYSER, Jno (SR) L1877 #MX1-48
KEYSER, John (LR) L1786 #OE1-408
KEYSER, Jos L1877 #MX1-48
KEYSER, Jos L1844 #A1-29
KEYSER, Michael (LR) L1786 #OE1-408
KEYWORTH, Eliza M1834 #ONT21-74
KEYWORTH, John L1867 #BU1-107
KEYWORTH, Richard L1867 #BU1-160
KEYWORTH, William L18-- #ONT21-74
KEZAR, W L1833 #ONT22-51
KEZAR, W (PH) L1879 #ONT22-17
KEZEICKS, Charles L1853 #ONT32-47,48,49
KEZER, A L1848 #OE1-111
KEZER, John (MIL) L17-- #OE1-398
KE-ZHIG-KO-E-NE-NE, B1811 #ONT32-22
KEZICKS, Charles L1852 #ONT32-37
KEZICKS, Charles L1855 #ONT32-71,75,78
KEZICKS, Charles (IND) L1855 #ONT32-63
KE-ZIG-KO-E-NE-NE, (SEE DAVID SAWYER) ICHF
KHRALING, Eckh L1877 #WO1-32
KHRALING, John L1877 #WO1-32
KHRON, Christr L1877 #WO1-32
KIBBE, H C L1879 #MP1-48
KIBBE, Henry L1851 #PE1-116
KIBBEY, Richard L1878 #FLA1-101
KIBBY, Richard L1878 #FLA1-36
KIBETAUCE, (HTR) L1871 #AG8-2
KIBLER, Frederick L1856 #HU1-93
KIBOME, George L1872 #EL2-62
KICK, J L1875 #BR1-87
KICK, M (MRS) L1859 #LW2-86
KICKLEY, W L1879 #HU1-47
KIDD, L1875 #PT1-XVIII
KIDD, (MR) L1876 #CL1-LIII
KIDD, (MR) L1871 #CL1-XL
KIDD, (MR) L1879 #PT1-XXVIII
KIDD, (MRS) L1837 #YO1-88
KIDD, Alex L1816 #LR1-17
KIDD, Alex Jr & Sr L1831 #PB2-122
KIDD, Alf L1879 #MP1-91
KIDD, Andrew L1867 #BU1-52
KIDD, Daniel (FAR) L1890 #SI4-94
KIDD, E L1879 #CL1-37
KIDD, Edward (MD) L18-- #CL1-48
KIDD, Geo L1878 #DN1-27
KIDD, Geo L1871 #WE1-201
KIDD, Geo (LAW) L1916 #ONT14-460
KIDD, George L1890 #GY1-45
KIDD, Hugh L1867 #BU1-91
KIDD, J L1879 #PT1-18
KIDD, J L1879 #HU1-55
KIDD, J (PAT) L1871 #ONT8-209
KIDD, J (PH) L1879 #PT1-4
KIDD, J A (FAR) L1890 #SI4-99

JEFFERS, Robert (REL) L1819(NY) #CDA1-100
JEFFERS, Robert (REL) L1819(ONT) #CDA1-101,102
JEFFERS, Robert (REL) L1820(ONT) #CDA1-112,121,123
JEFFERS, Wellington (REL) L1877 #VO2-250
JEFFERS, Wellington John D1917 L1879 #VO2-299
JEFFERSON, Chas L1837 #PL4-75
JEFFERSON, D B1839(ENG) L1861 #VO3-8
JEFFERSON, D W L1877 #NF1-42
JEFFERSON, D W (FAR) (MAP) L1877 #HA4-104
JEFFERSON, Frank L1875 #WT1-42
JEFFERSON, G L1878 #YO1-27
JEFFERSON, George L1871 #WE1-154
JEFFERSON, H (PAT) L1869 #ONT8-156
JEFFERSON, H (PAT) L1870 #ONT8-187
JEFFERSON, Henry L1837 #PL4-74
JEFFERSON, Isabella L1879 #HU1-59
JEFFERSON, J L1879 #PT1-29
JEFFERSON, John L1858 #PT1-63
JEFFERSON, John L1879 #PT1-XVIII
JEFFERSON, John L1879 #MP1-87
JEFFERSON, John L1871 #WE1-201
JEFFERSON, M L1855 #SM1-50
JEFFERSON, Mary L1879 #MP1-87
JEFFERSON, Paul L1871 #WE1-196
JEFFERSON, Richard L1871 #WE1-154
JEFFERSON, Robert (MR) (LB) L1865 #ONT24-313
JEFFERSON, Thomas L1883 #ES1-26
JEFFERSON, Thomas M1833 #ONT21-66
JEFFERSON, Wm L1883 #ES1-26
JEFFERSON, Wm L1884 #KT1-91
JEFFERT, C L1878 #DN1-40
JEFFERY, L1762(NI) #CDA6-45
JEFFERY, L19-- #MX2-107
JEFFERY, A L1877 #ON1-18
JEFFERY, A Edgar L1963 #MX2-121
JEFFERY, Albert L1849 #NF1-17
JEFFERY, Alfred L1883 #ES1-29
JEFFERY, Alfred L1837 #YO1-87
JEFFERY, Allan L1837 #PL4-74
JEFFERY, C L1879 #HU1-70
JEFFERY, David L1837 #YO1-87
JEFFERY, Edward L1878 #FLA1-29
JEFFERY, Edward L1855 #SM1-50
JEFFERY, George L1849 #NF1-17
JEFFERY, George L1883 #ES1-29
JEFFERY, George L1878 #FLA1-33
JEFFERY, George L1871 #WE1-47,49,60
JEFFERY, George S L1848 #CL1-46
JEFFERY, H L1877 #ON1-18
JEFFERY, H L1878 #DN1-16
JEFFERY, H P L1883 #ES1-29
JEFFERY, Isaac L1883 #ES1-29
JEFFERY, J L1879 #PT1-23
JEFFERY, J L1845 #A1-21
JEFFERY, J L1878 #DN1-16
JEFFERY, J J L1883 #ES1-29
JEFFERY, James L1872 #EL2-62
JEFFERY, James L1878 #FLA1-29
JEFFERY, James L1871 #ML2-6
JEFFERY, Jas L1879 #CL1-31
JEFFERY, Jno L1879 #CL1-31
JEFFERY, Jno L1879 #DD2-34
JEFFERY, Jno L1877 #NF1-38
JEFFERY, Jno (FAR) (MAP) L1877 #HA4-94
JEFFERY, John L1849 #NF1-17
JEFFERY, John L1837 #PL4-74,76
JEFFERY, John L1837 #YO1-87
JEFFERY, Jos L1875 #WT1-51
JEFFERY, Joseph L1840 #PT1-65
JEFFERY, L L1879 #HU1-70
JEFFERY, Nicol (LAW) L1916 #ONT14-458
JEFFERY, Peter L1855 #SM1-50
JEFFERY, Richard L1837 #YO1-87
JEFFERY, Richard (MIN) L1871 #AG4-5
JEFFERY, Stephen L1855 #SM1-50
JEFFERY, W L1877 #ON1-18,19
JEFFERY, W (EST) L1877 #ON1-23
JEFFERY, W P L1875 #WT1-51
JEFFERY, W P (AD) L1875 #WT1-61
JEFFERY, William L1855 #SM1-50
JEFFERY, Wm L1879 #DD2-23
JEFFERY, Wm (FAR) L1890 #SI4-88
JEFFERYS, (CAR) L1761 #CDA6-380
JEFFRAY, John L1877 #HA4-24
JEFFRAY, William L1838 #HU1-93
JEFFRAY, Wm L1879 #HU1-61
JEFFRAY, Wm L1877 #LM1-50
JEFFREY, L1871 #PT1-62
JEFFREY, L18-- #ON1-11
JEFFREY, L1877 #ON1-13
JEFFREY, L1876 #LW2-74
JEFFREY, L1820 #ONT17-31
JEFFREY, (MR) (LB) L1865 #ONT24-277
JEFFREY, (MRS) L1878 #YO1-26
JEFFREY, A L1876 #LW2-23
JEFFREY, A (MR) (LB) L1865 #ONT24-47,154,219,270,
277,289,553,554
JEFFREY, Amos M1832 #ONT21-37
JEFFREY, C L1877 #MX1-54
JEFFREY, Edgar L1883 #ES1-27
JEFFREY, Geo L1879 #MP1-96
JEFFREY, Geo L1871 #WE1-47
JEFFREY, Geo (FAR) (MAP) L1877 #HA4-46
JEFFREY, H P L1883 #ES1-27
JEFFREY, J (MRS) L1877 #HL1-30
JEFFREY, James L1878 #DN1-61
JEFFREY, James L1872 #DN1-109
JEFFREY, James L1883 #ES1-27
JEFFREY, Jas L1877 #MX1-61
JEFFREY, Jno L1877 #MX1-61
JEFFREY, John L1871 #WE1-233
JEFFREY, John L1878 #YO1-26
JEFFREY, John (ESTATE) L1878 #YO1-26
JEFFREY, John (FAR) (MAP) L1877 #HA4-47
JEFFREY, John H L1864 #DD2-457
JEFFREY, Joseph L1868 #DN1-104
JEFFREY, Joseph L19-- #MX2-111
JEFFREY, Mary (MRS) L1877 #NF1-26
JEFFREY, Mary (MRS) (FAR) (MAP) L1877 #HA4-86
JEFFREY, Mathew L1883 #ES1-27
JEFFREY, Peter (JR) L1890 #GY1-47
JEFFREY, Richard L1878(DF)(GY) #CDA4-456
JEFFREY, Sam L1879 #CL1-31
JEFFREY, Samuel L1878 #DN1-15
JEFFREY, Samuel L1849 #DN1-104
JEFFREY, Stephen L1828(WE) #ONT29-222
JEFFREY, Stephen L18-- #PB2-123
JEFFREY, W J (FAR) L1890 #SI4-94
JEFFREY, William L1845 #PT1-65
JEFFREY, William L1867 #BU1-91
JEFFREY, William L1878 #YO1-26
JEFFREY, Wm L1876 #OX1-21
JEFFREY, Wm #DD2-316
JEFFREY, Wm L1890 #SI4-91
JEFFREY, Wm (FAR) (MAP) L1877 #HA4-46
JEFFREYS, C W #ONT9-12
JEFFREYS, C W (ART) #ONT25-52,53
JEFFREYS, John L1877 #HA4-24
JEFFREYS, Wm (MR) (LB) L1865 #ONT23-171,392
JEFFRIES, (MRS) J C L1877 #MX1-69
JEFFRIES, Frederick L1890 #SI4-92
JEFFRIES, James L1890 #SI4-92
JEFFRY, Jacob L1890 #GY1-41
JEFFRY, Jno L1877 #MX1-72
JEFFRY, John L1877 #ON1-38,60
JEFFS, Ed (MR) (LB) L1865 #ONT23-11,21,160,613
JEFFS, Edward L1855 #SM1-50
JEFFS, Edward L1878 #YO1-44
JEFFS, Edward (FAR) L1890 #SI4-87,88
JEFFS, Edward (JR) (MR) (LB) L1865 #ONT23-336,395
JEFFS, Edward (MR) (LB) L1865 #ONT24-43,140,147,
298,300,354,383,426,430,576,637,693,693,804
JEFFS, Isaac L1884 #KT1-90
JEFFS, John L1884 #KT1-90
JEFFS, Phoeby (FAR) L1890 #SI4-88
JEFFS, Sam L1900C #VO1-122
JEFFS, Sam L1904 #VO1-300
JEFFS, Samuel (MRS) L18-- #VO1-123
JEGEOSH, Peter (FAR) L1871 #AG5-6
JEHL, Michl L1877 #WO1-39
JEHU, L1877 #NF1-42
JE JEUNE, #ONT7-76
JE JEUNE, L1637 #ONT7-92
JEKELL, Wm L1879 #CL1-15
JEKLING, John (JR) (MR) (LB) L1865 #ONT24-21
JELL, A P (MIL) L1899(MX) #ONT28-471
JELL, Horatio L1877 #MX1-45
JELL, Horatio (MR) (LB) L1865 #ONT23-142,373,557,
562,575,587,795
JELL, Horatio (MR) (LB) L1865 #ONT24-269
JELLET, Robert (PAT) L1866 #ONT8-102
JELLEY, Jno L1879 #MP1-64
JELLEY, Robt T L1872 #EL2-62
JELLIS, J L1875 #BR1-82
JELLY, L1900 #TK1-120,155
JELLY, Andrew L1871 #WE1-154
JELLY, D L1878 #LG1-68
JELLY, D F L1877 #MX1-54
JELLY, D H (POL) L1956 #TK1-103
JELLY, Edward (FAR) L1890 #SI4-92
JELLY, G E (POL) L1963 #TK1-103
JELLY, Henry L1871 #WE1-125
JELLY, J L1878 #LG1-36,37,47,48,65
JELLY, J J L1870 #MX1-7
JELLY, J J L1877 #MX1-54
JELLY, James L1871 #WE1-219
JELLY, John L1878 #LG1-36
JELLY, John (LUM) L1878(DF)(GY) #CDA4-456
JELLY, John J L1847 #A1-28
JELLY, Lorne M L19-- #TK1-118
JELLY, Simon (FAR) B1839(CDA) L1880(DF) #GY2-55
JELLY, Simon (MAP) L1880(DF)(GY) #GY2-27
JELLY, W B L1871 #WE1-154
JELLY, W H L1877 #MX1-54

APPENDIX A

LOCATIONS AND DATES OF FIRST SETTLEMENTS IN UPPER CANADA

From *Report of Ontario Agriculture Commission*, 1881

County	*Township*	*First Settled*	*First Recorded Settlers*	*Nationality*	*Religion*
I *Counties entered by settlers in* 1780 *or earlier*					
Essex	Sandwich W.	1700	Army Settlers (1700)	French	
	Sandwich E.	1760	Baby Family (1796)		
			Army Settlers (1760)	English	
	Gosfield	1782	Kratz, Weigeli, Iler, Fox (1782)	German	Lutheran (?)
	Colchester S.	1782–85			
Prince Edward	Marysburg North	1760	Hessians (1784)	German	Lutheran
	Hallowell	1770	Conrad Bongard		
			Quakers (1784)	English	Quaker
	Sophiasburg	1780	Quakers (1784)	English	Quaker
	Athol	1783			
	Hillier	1783			
	Marysburg South	1808			
Grenville	Edwardsburg	1775	Jessop's Corps (1784)	German, Scotch	Lutheran, Reformed
	Watford	1789			
	Bastard	1795			
	Augusta	1796	Paul & Barbara Heck (1778)		
			Jessop's Corps (1784)	German, Scotch	Lutheran, Reformed
	Oxford	1800			
	Gower South	1802			
Lennox and Addington	North Fredericksburg	1776			
	South Fredericksburg	1783	Col. Rogers' Corps (1784)	German, English, French	Lutheran, Quaker, Reformed
	Ernestown	1784	Miller, Mabee, Huff (1784)	German	Lutheran

	Adolphustown	1784	Van Alstine, Dorland (1784)	English	Quaker
			Rutton	French	Huguenot
			Moravians (?)	German	Moravian
	Camden and Richmond	1800			
Haldimand	Seneca	1776			
	Rainham	1791	Jacob Hoover & Sons (1791)	German	Mennonite
	Walpole	1791	Peter Klinger Smith (White Peter) (1788?)	German	
	Canboro	1802			
	Nelson	1804			
	Trafalgar	1805			
Stormont	Cornwall	1776			
	Osnabruck	1784			
	Finch	1805			
Lincoln	Caistor	1778	John Dochstader (1778)	German	
	Clinton	1780	John Beam (1788)	German	
	Louth	1780	Andrew Bradt	German	Lutheran (?)
	Grimsby	1780	Kulps, Albright, Hahn, Tufford (1786)	German	Mennonite
			John Greene (1782)		
	Gainsboro	1782	John Dochstader (1782)	German	
	Grantham	1783	John DeCou (1788)	French	Quaker
	Niagara	1784	Peter Lampman (1783)	German	Lutheran
Leeds	Elizabethtown	1779			
	Escott Front	1780	Jacob Baker (1797)		
	Yonge Front	1790			
	Leeds and Lansdowne	1805			
Hastings	Sidney	1780			
	Thurlow	1788			
Welland	Bertie	1780	Quakers	English	Quaker
	Pelham	1780	John Winger	German	Dunkard
			Quakers	English	Quaker
	Thorold	1781			
	Willoughby	1784	Sherk (1789)	German	Mennonite

a number of others and stopped over at Detroit. They travelled by pack horse and drove their cattle before them. At Detroit they met Leonhard Kratz and the group travelled on to Michigan, then Grosse Isle, and finally settled at Gosfield in 1792. Here a family of eleven children was born to them. Here, too, the family name was changed to Wigle to suit the aforementioned schoolmaster.

Philip Fox (Fuchs) came to Maryland in 1772 from Baden County, Germany. Later he moved to Pennsylvania, but after hearing of free land in Canada he proceded to Detroit, where he met Leonhard Kratz and other Germans. At first he stayed at Grosse Isle as the others had done, but in 1791 he moved to an area six miles below Windsor in the neighborhood of Petite Côte. Three years later he settled permanently at Gosfield.

1768-1843

J

Jacob Iler, together with his wife Elizabeth Snyder and her father, John Snyder, came from Pennsylvania about 1790 to settle at Grosse Isle. From there they moved in 1808 to a place near the lake now known as Colchester (Lot 37). At that time, trouble was brewing between the United States and Great Britain, and moving was forbidden. He was taken to Detroit to be tried for violating the law in attempting to move to his new purchase, but was acquitted. A man by the name of Chittenden encouraged him to make another attempt, promising him assistance. In the dead of night, provided with sleighs by Chittenden, the Ilers moved all their goods and chattels across the river without detection and, once over, were safe from molestation.

A treaty with the Indians dated May 22, 1784, had secured for the settlers a legitimate title to their lands. The earliest settlers appear to have settled at Delaware. James R. Brown of Edinburgh, who published his *Views of Canada and the Colonists* in 1844 and who claimed to have received his information directly from some of the original settlers, states: "Shortly after the landing of the U.E. Loyalists in the Niagara District, a party of them left Ancaster for the west, with tobacco, whisky, calico, knives, and trinkets for the Indian trade. Striking La Tranche about the present site of Woodstock, they took canoes and followed the river down past the forks, and camped near the present village of Delaware, making it the headquarters of the traffic with the Indians. The location pleased them and they sent back word to their friends

in Ancaster, some of whom speedily joined them and the foundation of the settlement was made." [71]

The Thames River Valley provided a natural means of communication between the Detroit area and Niagara for those who could not afford to travel by boat on Lake Erie. Fur-traders and Indians were doubtless familiar with this overland route, and we have the names of two families which came in by way of Niagara and who worked their way over to the Thames Valley. They were the Dolsens and the Fields, both from Wyoming, Pennsylvania. Having lost their farms and possessions through their unwillingness to join the Revolutionists, they later fought with Butler's Rangers.

George Field with his sons Daniel, Gilbert, and Nathan came to Niagara in 1778 from Northumberland, Pennsylvania, having been threatened with imprisonment because of their loyalty. Two of the sons, Daniel and Nathan, joined Butler's Rangers in 1778. The father died in 1787, and the mother and Gilbert were given land in 1791 in Ancaster Township, while Nathan took up land on the Thames. His brother Daniel went on to Detroit but later was given land in Raleigh.

Isaac Dolsen Sr., also originating in Northumberland County, Pennsylvania, was a man of property who fled to Niagara in 1778 with eighteen other Loyalists. His signature appears in a petition in 1783 to Colonel Butler asking for the right to sell their produce to others than the garrison, and also for leases. When this request was refused, Dolsen Sr. evidently became dissatisfied, since we find him in Detroit in 1784 and settled on a farm at Petite Côte next to that of Daniel Field.

Isaac Dolsen had seven sons: Isaac, Daniel, Gilbert, Matthew, Peter, Jacob, and John. One of these, Matthew, after fighting for a time with Butler's Rangers, came to Detroit in 1781 where he first became a trader, later buying a farm next to his father at Petite Côte. In 1789 he settled at Dover.

Another important pioneer of German or Plain Folk background mentioned by Hamil is Frederick Arnold Sr.[72] He is listed as a Dunkard who came from Germany in 1770 and settled in Redstone, Pennsylvania. Because he remained a Loyalist and his son joined Butler's Rangers, he came to

A1 (See MX1)

ADDINGTON COUNTY (AD) *(See also codes CDA and ONT)*

FLA1 **Illustrated Historical Atlas of the Counties of Frontenac, Lennox and Addington** (Published by J.H. Meacham & Co., Toronto, 1878)

ALGOMA DISTRICT (AG) *See also codes ONT and CDA*

AG1 Extracts from the 1871 federal census of **Killarney Township**, Algoma District (Microfilm #C10023, (Federal Archives)

AG2 Extracts from the 1871 federal census of **Spanish River Township**, Algoma District (Microfilm #C10023 Federal Archives)

AG3 Extracts from the 1871 federal census of **Mississauga River Township**, Algoma Centre County (Microfilm #C10023, Federal Archives

AG4 Extracts from the 1871 federal census of **Bruce Mines Township**, Algoma Centre County (Microfilm #C10023, Federal Archives)

AG5 Extracts from the 1871 federal census of **Sault Ste. Marie**, Algoma Centre County (Microfilm #C10023, Federal Archives)

AG6 Extracts from the 1871 federal census of **Batchewaning Township**, Algoma West County (Microfilm #C10024, Federal Archives)

AG7 Extracts from the 1871 federal census of **Michipicoten Township**, Algoma West County (Microfilm #C10024, Federal Archives)

AG8 Extracts from the 1871 federal census of **Pic Township**, Algoma West County (Microfilm #C10024, Federal Archives)

AG9 Extracts from the 1871 federal census of **St. Ignace Township**, Algoma West County (Microfilm #C10024, Federal Archives)

AG10 Extracts from the 1871 federal census of **Nipigon Township**, Algoma West County (Microfilm #C10024, Federal Archives)

AG11 Extracts from the 1871 federal census of **Kaministikuia Township**, Algoma West County (Microfilm #C10024, Federal Archives)

BATHURST DISTRICT *(see Counties of Carleton and Lanark)*

BOTHWELL COUNTY *(See Kent and Lambton Counties)*

BROCK DISTRICT *(see Oxford County)*

BRANT COUNTY (BR) *(See also codes ONT and CDA)*

BR1 **Illustrated Historical Atlas of the County of Brant** (Published by Page & Smith, Toronto, 1875)

BRUCE COUNTY (BU) *See also codes ONT and CDA*

BU1 1867. **Directory of the County of Bruce, Canada West** (Published by J.W. Booklidge, Montreal, 1867)

CANADA-WIDE SOURCES (CDA) *See also ONT codes*

CDA1 **The First Century of Methodism in Canada** Vol. 1, 1775-1839, by J.E. Sanderson. (Published by William Briggs, Toronto, 1908)

CDA3 **The Penguin Book of Canadian Verse** (Second Revised Edition) Edited by Ralph Gustafson (Penguin Books Canada Ltd., Markham, 1980)

CDA4 **Bradstreet's Reports of the Dominion of Canada**, July 1878. (Published by The Bradstreet Company, New York, 1878)

CDA5 **The Canada Directory**, by Robert W.S. MacKay (Published by John Lovell, Montreal, 1851)

CDA6 **Handbook of Indians of Canada** (Published by Geographic Board, Canada. Ottawa, 1913 Based on **Handbook of American Indians North of Mexico**, Part I (1907) and Part II (1910), published by the Bureau of American Ethnology)

CARDWELL COUNTY *(See Simcoe and Peel counties)*

CARLETON COUNTY (CL) *See also CDA and ONT codes)*

CL1 **Illustrated Historical Atlas of the County of Carleton (including City of Ottawa).** (Published by H Belden & Co., Toronto, 1879)

CL2 **Glimpses of Osgoode Township 150 Years.** (Published by The Osgoode Township Historical Society and Museum, Vernon, 1977)

COLBORNE DISTRICT *(See Peterborough County)*

DALHOUSIE DISTRICT *(see Carleton County)*

DUFFERIN COUNTY (DF) *See also CDA and ONT codes*

See all SI, WE, and GY codes

DUNDAS COUNTY (DD) *See also CDA and ONT codes*

DD1 **The Story of Dundas being a History of the County of Dundas from 1784 to 1904**, by J. Smyth Carter (The St. Lawrence Publishing House, Iroquois, 1905)

DD2 **Illustrated Historical Atlas of the Counties of Stormont, Dundas and Glengarry.** (Published by H. Belden & Co., Toronto, 1879)

DURHAM COUNTY (DU) *See also CDA and ONT codes.*

DN1 **Illustrated Historical Atlas of the counties of Northumberland and Durham, Ontario.** (Published by H Belden & Co., Toronto, 1878)

EASTERN DISTRICT (OE) *See also CDA and ONT codes*

OE1 **Lunenburgh or the Old Eastern District, Its Settlement and Early Progress. With Personal Recollections of the Town of Cornwall from 1824; to which are added A History of the King's Royal Regiment of New York and Other Corps, the names of all those who drew Lands in the Counties of Stormont, Dundas and Glengarry up to November 1876 and Several Other Lists of Interest to the Descendants of the Old Settlers.** by J.H. Pringle, Judge, County Court. (Published by the Standard Printing House, Cornwall, 1890)

ELGIN COUNTY (EL) *See also CDA and ONT codes.*

EL1 **The History of Aylmer to 1900**, by Kirk Barons (Published by Heritage Aylmer, 1981)

EL2 **County of Elgin Directory for 1872.** (Published by Armstrong & Co., Strathroy, 1872)

ESSEX COUNTY (ES) *See also CDA and ONT codes*

ES1 **Farmers' Directory for the County of Essex for 1883-4.** (Published by Union Publishing Company Ingersoll, 1884)

FRONTENAC COUNTY (FR) *See also CDA and ONT codes.*

FLA1 **Illustrated Historical Atlas of the Counties of Frontenac, Lennox and Addington.** (Published by J H Meacham & Co., Toronto, 1878)

GLENGARRY COUNTY (GL) *See also CDA and ONT codes.*

GL1 *(Includes ONT22)*
Illustrated Historical Atlas of the Counties of Stormont, Dundas and Glengarry (Published by H Belden & Co., Toronto, 1879)

GL2 **Sketches Illustrating the Early Settlement and History of Glengarry in Canada**, by J.A. MacDonnell Published by Wm. Foster, Brown & Co., Montreal, 1893)

GORE DISTRICT *(see Wentworth and Halton counties)*

GRENVILLE COUNTY (GR) *See also CDA and ONT codes*

LG1 **Illustrated Historical Atlas of the Counties of Leeds and Grenville, Canada West** Published by Mika Publishing, Belleville, 1973)

GREY COUNTY (GY) *See also CDA and ONT codes*

GY1 **Farmers' Directory for the County of Grey for 1890** (Published by Union Publishing Company, Ingersoll, 1890)

GY2 **History of Sydenham Township** (Published by Sydenham Township Council, Owen Sound, 1967)

Some GY2 references refer to the Grey County [illegible]. Page numbers [illegible] are [illegible], because they were renumbered in the reprint.

HALDIMAND COUNTY (HA) *See also CDA and ONT codes*

(HA4-1 to HA4-52; HA4-52 and up are Norfolk County)

HA4 **Illustrated Historical Atlas of the Counties of Haldimand and Norfolk** (Published by H.R. Page & Co., Toronto, 1877)

HALTON COUNTY (HL) *See also CDA and ONT codes*

HL1 **Illustrated Historical Atlas of the County of Halton** (Published by Walker & Miles, Toronto, 1877)

HASTINGS COUNTY (HS) *See also CDA and ONT codes*

HS1 **Illustrated Historical Atlas of the Counties of Hastings and Prince Edward** (Published by H. Belden, Toronto, 1878)

HOME DISTRICT *(see counties of Simcoe and York, including City of Toronto)*

HURON COUNTY (HU) *See also CDA and ONT codes*

HU1 **Illustrated Historical Atlas of the County of Huron** (Published by H. Belden & Co., Toronto, 1879)

HURON DISTRICT *(see County of Huron; previous to 1842 this was part of the London District)*

JOHNSTOWN DISTRICT *(see counties of Grenville and Leeds)*

KENT COUNTY (KT) *See also CDA and ONT codes*

KT1 **Farmers' Directory of the County of Kent for 1884-5** (Published by Union Publishing Company, Ingersoll, 1885)

KT2 **Baldoon, Lord Selkirk's Settlement in Upper Canada**, by A.E.D. MacKenzie (Published by Phelps Publishing Company, London, Ontario, 1978)

LAMBTON COUNTY (LM) *See also CDA and ONT codes*

LM1 **Directory of the County of Lambton for 1877** (Published by Armstrong & Co., Strathroy, 1877)

LANARK COUNTY (LK) *See also CDA and ONT codes*

LR1 **The Illustrated Atlas of the Dominion of Canada** (Lanark Supplement) (Published by H. Belden & Co., Toronto, 1880)

LK3 **Historical Sketches of Appleton, a Lanark County Village** by Jack Brown (Published at Mallorytown, 1973)

LK4 "Directory for Perth" (1858 circa) from map of the Counties of Lanark and Renfrew, by Walling (Published by Putnam, Prescott, 1863)

LEEDS COUNTY (LE) *See also CDA and ONT codes*

LG1 **Illustrated Historical Atlas of the Counties of Leeds and Grenville, Canada West** (Published by Mika Publishing, Belleville, 1973)

LENNOX COUNTY (LX) *See also CDA and ONT codes*

FLA1 **Illustrated Historical Atlas of the Counties of Frontenac, Lennox and Addington** (Published by J.H. Meacham & Co., Toronto, 1878)

LINCOLN COUNTY (LI) *See also CDA and ONT codes*

LW1 **The Story of Butler's Rangers and the Settlement of Niagara**, by Enrest Cruikshank (Published by Lundy's Lane Historical Society, Fort erie, 1893)

LW2 **Illustrated Historical Atlas of the Counties of Lincoln and Welland** (Published by H.R. Page, Toronto, 1876)

LI2 **Township of Niagara (Niagara Township Centennial History)** by A. James Rennie (Published by Niagara Township Council, 1967)

LONDON DISTRICT *(see Middlesex & Elgin Counties)*

LUNENBURGH *(see Eastern District)*

MANITOULIN COUNTY (ML) *See also AG. CDA and ONT codes*

ML1 Extracts from the 1871 federal census of **Manitoulin east Township**. Manitoulin County (Microfilm #C10023. Public Archives. Ottawa)

ML2 Extracts from the 1871 federal census of **Manitoulin Centre Township**. Manitoulin County (Microfilm #C10023. Public Archives. Ottawa)

ML3 Extracts from the 1871 federal census of **Manitoulin West Township**. Manitoulin County (Microfilm #C10023. Public Archives. Ottawa)

MIDDLESEX COUNTY (MX) *See also CDA and ONT codes*

MX1 **Illustrated Historical Atlas of the County of Middlesex** (Published by H.R. Page & Co., Toronto. 1878)

MX2 **Orchard Park through the Ages** (Revised Edition) by Dianne E. Cunningham (Published by the London Board of Education. London. 1983)

MIDLAND DISTRICT *(see Frontenac. Lennox. Addington Counties)*

MONCK COUNTY *(see Lincoln. Welland and Haldimand Counties)*

MUSKOKA DISTRICT (MU) *See also CDA and ONT codes*

MP1 **Guide Book & Atlas of Muskoka and Parry Sound Districts 1879** Settlers maps by Captain John Rogers. drawings by Seymour Penson (Published by H.R. Page & Co.. Toronto. 1879)

NEWCASTLE DISTRICT *(see Counties of Durham and Northumberland)*

NIAGARA DISTRICT *(see counties of Haldimand. Lincoln and Welland)*

NIPISSING DISTRICT (NP) *See also RE. MP. CDA and ONT codes*

NP1 Extracts from the 1871 federal census of **Petawawa Township**. Nipissing District (Microfilm #C10022. Public Archives. Ottawa

NP2 Extracts from the 1871 federal census of **Ralph. Buchanen. Wylie and McKay Townships**. Nipissing District (Microfilm #C10022. Public Archives. Ottawa)

NP3 Extracts from the 1871 federal census of **Head Township**. Nipissing District (Microfilm #C10022. Public Archives. Ottawa)

NP4 Extracts from the 1871 federal census of **East Madawaska Township**. Nipissing District (Microfilm #C10022. Public Archives. Ottawa)

NP5 Extracts from the 1871 federal census of **West Madawaska Township**. Nipissing District (Microfilm #C10022. Public Archives. Ottawa)

NP6 Extracts from the 1871 federal census of **Bonnechere Township**. Nipissing District (Microfilm #C10022. Public Archives. Ottawa)

NP7 Extracts from the 1871 federal census of **South Petawawa**. Nipissing District (Microfilm #C10022. Public Archives. Ottawa)

NP8 Extracts from the 1871 federal census of **North Petawawa**. Nipissing District (Microfilm #C10022. Public Archives. Ottawa).

NP9 Extracts from the 1871 federal census of **Centre Petawawa**. Nipissing District (Microfilm #C10022. Public Archives. Ottawa)

NP10 Extracts from the 1871 federal census of **West Petawawa Township**. Nipissing District (Microfilm #C10022. Public Archives. Ottawa)

NP11 Extracts from the 1871 federal census of **Rocher Capitaine**. Nipissing District (Microfilm #C10022. Public Archives. Ottawa)

NP12 Extracts from the 1871 federal census of **Deux Rivieres Township**. Nipissing District (Microfilm #C10022. Public Archives. Ottawa)

NP13 Extracts from the 1871 federal census of **Matawan South Township**. Nipissing District (Microfilm #C1022. Public Archives. Ottawa)

NP14 Extracts from the 1871 federal census of **Matawan West Township**. Nipissing District (Microfilm C10022. Public Archives. Ottawa)

NP15 Extracts from the 1871 federal census of **Matawan North Township**. Nipissing District (Microfilm #C10022. Public Archives. Ottawa)

NP16 Extracts from the 1871 federal census of **Jocko River Township**. Nipissing District (Microfilm #C10022. Public Archives. Ottawa)

NP17 Extracts from the 1871 federal census of **Montreal River Township**. Nipissing District (Microfilm #C10022. Public Archives. Ottawa)

NP18 Extracts from the 1871 federal census of **Timiskaming West Township**. Nipissing District (Microfilm #C10022. Public Archives. Ottawa)

NP19 Extracts from the 1871 federal census of **Tamagaminque Township**. Nipissing District (Microfilm #C10022 Public Archives. Ottawa)

NORFOLK COUNTY (NF) *See also CDA and ONT codes*

NF1 **Illustrated Historical Atlas of the County of Norfolk** (Published by H.R. Page & Co.. Toronto. 1877)

NF2 **True History of Some of the Pioneers of Colorado** by Luella Shaw (Published by W.S. Coburn. John Patterson and A.K. Shaw. Hotchkiss. Colorado. U.S.A.. 1909)

NORTHUMBERLAND COUNTY (NO) *See also CDA and ONT codes*

DN1 **Illustrated Historical Atlas of the Counties of Northumberland and Durham** (Published by H. Belden & Co.. Toronto. 1878)

OLD EASTERN DISTRICT (LUNENBURGH) *(see EASTERN DISTRICT)*

ONTARIO COUNTY (ON) *See also CDA and ONT codes*

ON1 **Illustrated Historical Atlas of the County of Ontario** (Published by J.H. Beers & Co.. Toronto. 1877)

OTTAWA DISTRICT *(see Counties of Prescott and Russell)*

ONTARIO (PROVINCE-WIDE SOURCES (ONT) *See also CDA code*

ONT2 **The Empire Law List 1949/1950** (Published by Butterworth & Co. (Publishers) Ltd.. London. England. 1949

ONT3 **The Pioneers of Old Ontario** by W.L. Smith (Published by George N. Morang. Toronto. 1923)

ONT4 **Grand River** by Mabel Dunham (Published by McClelland and Stewart. Toronto. 1945)

ONT7 **The Jesuit Martyrs of North America** by John J. Wynne (Published by The Universal Knowledge Foundation. New York. 1925)

ONT8 **List of Canadian Patents from the Beginning of the Patent Office. June 1824. to the 31st of August. 1872** (Published by Maclean. Roger & Co.. Ottawa. 1882)

ONT9 **Champlain. The Life of Fortitude**. by Morris Bishop (Published by Macdonald & Co.. London. England. 1949)

ONT10 **Dictionary of Canadian Biography** (Vol. I. 1000-1700 A.D.) Edited by George W. Brown (Published by University of Toronto Press. Toronto. 1966)

ONT11 Reports of the Superintendant of Education for Upper Canada (Published in 1854. 1855. 1856 and 1858)

ONT12 **The Centennial of the Settlement of Upper Canada by the United Empire Loyalists 1784 - 1884. (The Celebrations at Adolphustown. Toronto and Niagara. with An Appendix containing a copy of the United Empire List. preserved in the Crown Lands Department at Toronto** (Published by Rose Publishing Company. Toronto. 1885)

ONT13 **The Bible in Canada**. by E.C. Woodley (Published by J.M. Dent & Sons (Canada) Limited. Toronto. 1953)

ONT14 **The Canadian Almanac and Miscellaneous Directory for the Year 1916**. Edited by Arnold W. Thomas (Published by the Copp-Clark Company. Toronto. 1915)

ONT15 **The Refugee: or the Narratives of Fugitave Slaves In Canada Related by Themselves with An Account of the History and Conditions of the Colored Population of Upper Canada**. by Benjamin Drew (Published by John. P. Jewett and Company. Cleveland. Ohio. U.S.A.. 1856)

ONT16 **Historic Ontario "Old Upper Canada"**. Compiled by Frank Fog (Published by Direction of Baptist Johnston. Printer to the Queen's Most Excellent Majesty. Ottawa. n.d.. for the Department of Travel and Publicity of the Province of Ontario)

ONT17 *(see ONT 3)*

ONT18 **The Trail of the Black Walnut**. by G. Elmore Reaman (Published by McClelland & Stewart. Toronto. 1957)

ONT 19 **A Narrative of the Rise & Progress of Emigration from the Counties of Lanark and Renfrew to the New Settlements in Upper Canada on Government Grant: comprising the Proceedings of the Glasgow Committee for Directing the Affairs and Embarkation of the Societies. With a Map of the Townships. Designs for Cottages. and A Plan of the Ship *Earl of Buckingham*. Also. Interesting Letters from the Settlements.** by Robert Lamond. Secretary and Agent (Glasgow. Scotland. 1821)

ONT20 **The British Farmer's and Farm Labourer's Guide to Ontario. the Premier Province of the Dominion of Canada**. issued by authority of the Government of Ontario (Toronto. 1880)

ONT21 **Marriage Notices of Ontario**, by William D. Reid (Published by Hunterdon House, Lambertville, N.J., U.S.A., 1980)

ONT22 **Illustrated Historical Atlas of the Counties of Stormont, Dundas and Glengarry**. (Published by H. Belden & Co., Toronto, 1879)

ONT23 **The Canada Herd Book: containing the Pedigrees of Improved Short-Horned Cattle**. (Vol. I) Edited by the Secretary of the Agricultural and Arts Association of Ontario (Published by the Globe Printing Company, Toronto, 1872)

ONT24 **The Canada Herd Book: containing the Pedigrees of Improved Short-Horned Cattle**. (Vol. 3). Edited by the Secretary of the Agricultural and Arts Association of Ontario (Published by A.A.A. of Ontario, Toronto, 1875)

ONT25 **Loyal She Remains** (Published by the United Empire Loyalists' Association of Canada, Toronto, 1984)

ONT26 "Jessup's Rangers as a factor in Loyalist Settlement" by E. Rae Stewart from **Three History Theses** (Published under the auspices of The Ontario Department of Public Records and Archives, Toronto, 1961)

ONT27 **Battle Royal. A History of The Royal Regiment of Canada 1862-1979**, by Lt.-Col. D.J. Goodspeed, CD (Published by the Royal Regiment of Canada Association, 1962)

ONT29 **The Canada Company**, by Thelma Coleman (Published by the County of Perth and Cumming Publishers, Stratford, 1978)

ONT30 **The Advantages of Emigration to Canada, being the Substance of Two Lectures, delivered at the Town Hall, Colchester, and the Mechanics' Institution, Ipswich**, by William Cattermole (Published by Simpkin and Marshall, London, England, 1831)

ONT31 **The story of the Talbot Settlement 1803-1840. A Frontier History of Southwestern Ontario**, by Wayne Paddon (Published at St. Thomas, 1975)

ONT32 **The Indian Chief: An Account of the Labours, Losses, Sufferings, and Oppression of KE-ZIG-KO-E-NE-NE (David Sawyer) A Chief of the Ojibbeway Indians in Canada West**, by Enemikeese (C. VanDusen) (Published at London, England, 1867)

OXFORD COUNTY (OX) *See also CDA and ONT codes*

OX1 **Illustrated Historical Atlas of the County of Oxford** (Published by Walker & Miles, Toronto, 1876)

PARRY SOUND DISTRICT *See also CDA and ONT codes*

MP1 **Guide Book & Atlas of Muskoka and Parry Sound Districts 1879**, settlers' maps by Captain John Rogers, drawings by Seymour Penson (Published by H.R. Page & Co., Toronto, 1879)

PEEL COUNTY (PL) *See also CDA and ONT codes*

PL4 **Directory of the Home District 1837** (County of Peel extracts) (Published by George Walton, Toronto, 1837)

PL5 **Directory of the County of Peel for 1873-4**, by John Lynch (Published at Brampton, 1874)

PL6 **Belfountain and the Tubtown Pioneers**, by Margaret Whiteside (Published by the Boston Mills Press, Cheltenham, 1975)

PL7 **Cook's History of Inglewood**, by William E. Cook (Published by the Boston Mills Press, Cheltenham, 1975)

PERTH COUNTY (PT) *See also CDA and ONT codes*

PT1 **Illustrated Historical Atlas of The County of Perth** (Published by H. Belden & Co., Toronto, 1879)

PETERBOROUGH COUNTY (PB) *See also CDA and ONT codes*

PB1 **The Peter Robinson Settlement of 1825. The Story of the Irish Immigration to the City and County of Peterborough, Ontario**, by Bill La Branche (Published by Total Graphics, Peterborough, 1975)

PB2 **Illustrated Historical Atlas of Peterborough County, 1825-1875**. Edited by A.C.O. Cole (Published by the Peterborough Historical Atlas Foundation, Peterborough, 1975)

PRESCOTT COUNTY (PC) *See also CDA and ONT codes*

ONT22 **The Illustrated Atlas of the Dominion of Canada** (Prescott Supplement) (Published by H. Belden & Co., Toronto, 1881)

PRINCE EDWARD COUNTY (PE) *See also CDA and ONT codes*

PE1 Extracts from the 1851-1852 federal census of **Prince Edward County** Microfilm #C-11750, Public Archives, Ottawa)

PRINCE EDWARD DISTRICT *(see Prince Edward County)*

RENFREW COUNTY (RE) *See also CDA and ONT codes*

LR1 **The Illustrated Atlas of the Dominion of Canada** (Renfrew Supplement) (Published by H. Belden & Co., Toronto, 1881)

RE2 Extracts from the 1851 federal census of **Admaston Township**, Renfrew County (Microfilm #C11751, Public Archives, Ottawa)

RE3 Extracts from the 1851 federal census of **Bagot Township**, Renfrew County (Microfilm #C11751, Public Archives, Ottawa)

RE4 Extracts from the 1851 federal census of **Blithefield Township**, Renfrew County (Microfilm #C11751, Public Archives, Ottawa)

RE5 Extracts from the 1851 federal census of **Bromley Township**, Renfrew County (Microfilm #C11751, Public Archives, Ottawa)

RE6 Extracts from the 1851 federal census of **Horton Township**, Renfrew County (Microfilm #C11751, Public Archives, Ottawa)

RE7 Extracts from the 1851 federal census of **Ross Township**, Renfrew County (Microfilm #C11751, Public Archives, Ottawa)

RE8 Extracts from the 1851 federal census of **McNab Township**, Renfrew County (Microfilm #C11751, Public Archives, Ottawa)

RE9 Extracts from the 1851 federal census of **Westmeath Township**, Renfrew County (Microfilm #C11751, Public Archives, Ottawa)

RE10 Extracts from the 1851 federal census of **Pembroke Township**, Renfrew County (Microfilm #C11751, Public Archives, Ottawa)

RE11 Extracts from the 1851 federal census of **Stafford Township**, Renfrew County (Microfilm #C11751, Public Archives, Ottawa)

RE12 Extracts from the 1851 federal census of **Brougham Township**, Renfrew County (Microfilm #C11751, Public Archives, Ottawa)

RE13 Extracts from the 1851 federal census of **Grattan Township**, Renfrew County (Microfilm #C11751, Public Archives, Ottawa)

RE14 Extracts from the 1851 federal census of **Wilberforce Township**, Renfrew County (Microfilm #C11751, Public Archives, Ottawa)

RUSSELL COUNTY (RU) *See also CDA and ONT codes*

ONT22 **The Illustrated Atlas of the Dominion of Canada** (Russell supplement) (Published by H. Belden & Co., Toronto, 1881)

SIMCOE COUNTY (SI) *See also CDA and ONT codes*

SI4 **Farmers' Directory for the County of Simcoe for 1890** (Published by Union Publishing Company, Ingersoll, 1890)

SIMCOE DISTRICT *(Formed part of the Home District until 1843. See Simcoe and Grey Counties)*

STORMONT COUNTY (ST) *See also CDA and ONT codes*

ONT22 **Illustrated Historical Atlas of the Counties of Stormont, Dundas and Glengarry** (Published by H. Belden & Co., Toronto, 1879)

TALBOT DISTRICT *(see Norfolk and Haldimand Counties)*

TIMISKAMING DISTRICT (TK) *See also CDA and ONT codes*

TK1 **In the Beginning and Now. The Story of New Liskeard**, by Edna Lillian Craven and Nora E. Craven (Published at New Liskeard, 1956)

VICTORIA COUNTY (VO) *See also CDA and ONT codes*

VO1 **Eldon Connections: Portraits of a Township**, by Rae Fleming

VO2 **County of Victoria Centennial History**, by Watson Kirkconnell (Published by Victoria County Council, Lindsay, 1967)

VO3 Extracts from the 1861 federal census of **Mariposa Township**, Victoria County (Microfilm #C1076, Public Archives, Ottawa)

VO4 **Land of Plenty**, Edited by Ross. N. Carr (Published by Ops Township Council, 1968)

VO5 Extracts from the 1851 federal census of **Emily Township**. Victoria County (Microfilm #C11753. Public Archives. Ottawa)

VO6 Extracts from the 1851 federal census of **Fenelon Township**. Victoria County (Microfilm #C11753. Public Archives. Ottawa)

VO7 Extracts from the 1851 federal census of **Bexley Township**. Victoria County (Microfilm #C11753. Public Archives. Ottawa)

VO8 Extracts from the 1851 federal census of **Verulam Township**. Victoria County (Microfilm #C11753. Public Archives. Ottawa)

VO9 **Roses and Thorns. A Goodly Heritage. The Early Days of Baddow and Area.** by Gladys M. Suggitt (Published at Fenelon Falls. 1972)

VICTORIA DISTRICT *(see Hastings County)*

WATERLOO COUNTY (WO) *See also CDA and ONT codes*

WO1 **(WO-1 to WO1-30)**
Illustrated Atlas of the County of Waterloo (Published by H. Parsell & Co.. Toronto 1881)

WO1 **(WO1-31 to WO1-46)**
The County of Waterloo Gazetteer and Directory for 1877-8 (Published by Armstrong & Co . Toronto. 1878)

WELLAND COUNTY (WL) *See also CDA and ONT codes*

LW1 **Illustrated Historical Atlas of the Counties of Lincoln and Welland** (Published by H.R. Page. Toronto. 1876)

WELLINGTON COUNTY (WE) *See also CDA and ONT codes*

WE1 **Gazetteer and Directory of the County of Wellington for 1871-2** (Published by A.O. Loomis & Co.. Hamilton. 1871)

WE3 **Early History of the Township of Erin.** by C.J. McMillan.

WELLINGTON DISTRICT *(see Waterloo and Wellington Counties)*

WENTWORTH COUNTY (WT) *See also CDA and ONT codes*

WT1 **Illustrated Historical Atlas of the County of Wentworth** (Published by Page & Smith. Toronto. 1875)

WESTERN DISTRICT *(see Essex. Kent and Lambton Counties)*

YORK COUNTY (YO) *See also CDA and ONT codes*

YO1 **(YO1-1 to YO1-82)**
Illustrated Historical Atlas of the County of York (Published by Miles & Co.. Toronto. 1878)

YO1 **(YO1-83 to YO1-88)**
City of Toronto and Home District Commercial Directory for 1837 (Published by George Walton. Toronto. 1837)

YO2 **The Town of York 1815-1834. A Further Collection of Documents from Early Toronto.** Edited by Edith G. Firth (Published by the Champlain Society for the Government of Ontario. University of Toronto Press. Toronto. 1966)

Ontario

Ministry of Culture and Communications
Ministère de la Culture et des Communications

Archives of Ontario
77 Grenville Street
Toronto, Ontario
M7A 2R9
Tel: (416) 965-4039
Fax: (416) 324-3600

Archives publiques de l'Ontario
77, rue Grenville
Toronto, Ontario
M7A 2R9
Tél: (416) 965-4039
Fax: (416) 324-3600

THE ARCHIVES OF ONTARIO COMMUNICATES!

We announce with pleasure that the Archives of Ontario's new telephone system is now operating. It ends over 20 years of black dial phone communications -- not a moment too soon, as our customers may know. All staff now have personal numbers. If you use our toll-free number, your call can now be transferred to any other Archives number.

People using old numbers will be referred to the new ones by the Queen's Park switchboard.

Our new telephone number list has been mailed to our main user groups, all Ontario archives in the Ontario Council of Archives, and the 11 other provincial/territorial archives. If you would like a copy, please phone the Reference Inquiry numbers below, or ask our Reference Archivists, or write us at 77 Grenville Street, Toronto, Ontario, M7A 2R9.

ARCHIVES OF ONTARIO: TELEPHONE CONTACT NUMBERS
(FROM FEBRUARY 1991)

READING ROOMS:	
Reference Inquiries - General	(416) 327-1582
" " - Genealogical	(416) 327-1583
" " - Special Collections	(416) 327-1552
GENERAL INQUIRIES (Toronto local number)	(416) 327-1600
ALL INQUIRIES -- TOLL-FREE CALLS (From Ontario and Quebec only)	1-800-668-9933
IAN WILSON (ARCHIVIST OF ONTARIO)	(416) 327-1602/1603

Public Service Section
18 February 1991

Ontario

Ministry of Culture and Communications
Ministère de la Culture et des Communications

Archives of Ontario
77 Grenville Street
Toronto, Ontario
M7A 2R9
416 965-4039

Archives publiques de l'Ontario
77, rue Grenville
Toronto, Ontario
M7A 2R9
416 965-4039

WHAT ONTARIO'S FREEDOM OF INFORMATION AND PROTECTION OF PRIVACY ACT MEANS FOR YOU

This legislation, passed in June 1987, came into effect on January 1, 1988.

As with most records held by other provincial government institutions, access to the historical records located in the Archives of Ontario are governed by the Freedom of Information and Protection of Privacy Act. Records here that were open at the time the Act came into effect remain available to the public, except for those records containing personal information.

Records in the Archives which were acquired from non-government sources (i.e. private individuals and organizations) are not affected by the legislation.

This legislation gives you the right of access to information held by the Ontario government and its agencies.

The Archives uses an informal access procedure. This is designed to give access to non-exempt records as quickly as possible without the time and expense of making a formal access request. Whether an informal or formal access request, the records will always be reviewed in a manner consistent with the provisions of the Freedom of Information and Protection of Privacy Act.

HOW TO PLACE AN INFORMAL ACCESS REQUEST

Researchers may ask for government records to which access is restricted using the informal access procedure. This is done simply by submitting a Records Request Slip directly to the Access Unit. Please provide as complete an archival reference as possible on this form. This will normally include: Record Group No., Record Series reference or Accession No., Box No., and/or File no., as well as full title of item and relevant dates.

The time needed for Archives staff to complete an access review will depend on the number and size of files and the backlog of records to be reviewed. If you have a deadline, we recommend that you submit your request well in advance.

Before you request restricted government records, please consult with the Reference Archivist on duty in the Reading Room. They will arrange for you to consult with an Access Officer and to submit your request.

QUE SIGNIFIE POUR VOUS LA LOI DE 1987 SUR L'ACCÈS À L'INFORMATION ET LA PROTECTION DE LA VIE PRIVÉE?

Cette loi adoptée en juin 1987 est entrée en vigueur le 1er janvier 1988.

Comme pour la plupart des documents détenus par d'autres institutions du gouvernement provincial, l'accès aux documents historiques déposés aux Archives publiques de l'Ontario est régi par la Loi de 1987 sur l'accès à l'information et la protection de la vie privée. Les documents déjà disponibles au moment où la Loi est entrée en vigueur, restent disponibles au public, à l'exception de ceux qui contiennent des renseignements personnels.

Les documents déposés aux Archives publiques venant de sources non gouvernementales (particuliers et organismes privés) ne sont pas visés par la Loi.

La présente Loi vous donne le droit d'accès aux renseignements recueillis par le gouvernement de l'Ontario et ses organismes.

L'utilisation, par les Archives publiques, de la procédure d'accès officieuse permet de vous donner accès à des documents qui ne font pas l'objet d'exceptions le plus vite possible sans avoir à remplir une demande d'accès officielle. Qu'il s'agisse d'une demande d'accès officieuse ou officielle, les documents seront toujours étudiés conformément aux dispositions de la Loi de 1987 sur l'accès à l'information et la protection de la vie privée.

COMMENT PRÉSENTER UNE DEMANDE OFFICIEUSE D'ACCÈS

Les recherchistes peuvent demander de consulter des documents gouvernementaux auxquels l'accès est restreint en présentant une demande d'accès officieuse. Il s'agit simplement de déposer une Formule de demande de dossiers auprès de l'Unité de l'accès. Veuillez donner si possible des renseignements archivistiques complets sur cette formule. Ces renseignements comprendront normalement : le numéro de groupe d'archives, le numéro de série ou le numéro d'acquisition, le numéro de carton et/ou de dossier ainsi que le titre intégral de l'article et les dates pertinentes.

Le temps qu'il faudra au personnel des Archives pour répondre à une demande d'accès variera selon le nombre et la taille des dossiers faisant l'objet de la demande et la charge de travail que représentent les demandes antérieures encore à l'étude. Si vous avez une date limite à respecter, nous vous recommandons vivement de faire votre demande bien à l'avance.

Avant de faire une demande d'accès à des documents du gouvernement dont l'accès est limité, veuillez consulter, dans la salle de lecture, l'archiviste de service chargé(e) des dossiers de référence. Il ou elle fera en sorte que vous puissiez consulter l'agent(e) chargé(e) de l'accès et présenter votre demande.

Ontario

Ministry of Culture and Communications
Ministère de la Culture et des Communications

Archives of Ontario
77 Grenville Street
Toronto, Ontario
M7A 2R9
Tel: (416) 965-4039
Fax: (416) 324-3600

Archives publiques de l'Ontario
77, rue Grenville
Toronto, Ontario
M7A 2R9
Tél: (416) 965-4039
Fax: (416) 324-3600

ONTARIO GOVERNMENT IMMIGRATION RECORDS FOR GENEALOGISTS

1. The Government of Ontario at various times has maintained offices involved in promoting and controlling immigration to and settlement in Ontario. These records contain some material which, although limited as to time period, is of interest to genealogists.

2. Other records of the Government of Ontario (and its pre-Confederation predecessors, Upper Canada/Canada West) also include nominal lists of settlers, land records, lists of aliens on British North American soil, lists of loyalists, and other records of new arrivals to Ontario. Among government records, please refer especially to the records of the Provincial Secretary (RG 8) and of Crown Lands (RG 1). Finding aids for these records are available at the Archives of Ontario. <u>This summary does not cover the latter records; it is confined to the records of the immigration process proper</u>.

<u>Ontario Immigration Records in AO, RG 11 (Immigration)</u>

3. RG 11 at the AO contains the surviving records of the Immigration Branch of the Ontario Department of Agriculture and Public Works (1869-1873), and its successor the Department of Immigration (1873-1901). No records have yet been located originating in the Immigration Branch of the Ontario Bureau of Colonization (created in 1901) or any of its successors down to 1944. The AO has some immigration-related records of the period 1944-c. 1960, in RG 9 (see paragraph 17, below). These were created by the Immigration Branch of the Department of Planning and Development. (This department was renamed the Department of Commerce and Development, then Economics and Development in 1961; it became the Department of Trade and Development in 1968, and last the Ministry of Industry and Tourism in 1972). These offices were responsible (among other things) for promoting

immigration to Ontario in the period from 1944 to the 1970s. Parallel records in RG 6 include correspondence between the Premier's office and Ontario House (London, England) concerning British immigration in the period 1868-1960s, as well as records on the Hungarian Refugee Program, 1956-58.

4. A large proportion of the records in RG 11 of genealogical interest were created by the provincial government, mainly in the period 1869-1880, to document special bonus schemes (1872-75) and later other special assisted passage schemes. Some of the nominal lists were created by the federal immigration services and formally transferred to Ontario at an early date, under the joint provincial/federal mandate for immigration services prescribed by the British North America Act, and special agreements under which federal agents administered immigrant arrivals for the province. Counterpart federal records of the same period are found at the federal level, at the National Archives (NA) in RG 17 series I A (Agriculture) and RG 76 (Immigration) series B, C, D, and E. For guides to this material, see para. 19 below.

RG 11 Records Containing Nominal Lists

5. A variety of records in RG 11, kept for administrative, financial, or statistical purposes, contain some nominal lists of immigrants to Ontario. Most are dated 1862-1880. These lists supplement the more extensive federal Records of Entry (especially the ships' passenger lists, dated 1865-1918 ; see para 19 below). Some of the items in RG 11 may be unique and not duplicated in RG 76. A more detailed list follows.

6. ARRIVAL/DESTINATION RECORDS, 1862-1881 (RG 11, series M; **available on microfilm, MS 847 reels 6-8; see attached list)**. These are both nominal and statistical records of immigrant arrivals in Ontario. Some were Provincial records; others were created by federal immigration agents and forwarded to the Province. **A list of volumes with their outside dates is available.**

7. The nominal portion of the arrival/destination records consists of records relating to four provincial field offices:

▸ Kingston.

One register of immigrants landed at Kingston, 1862-1878. Information may include all or some of the following: Name of person or HOF/destination/country of origin/via what seaport/health/age-sex breakdown of family/if settlers or servants, in what township/any tickets, rations or medical aid given/capital imported/remarks.

This register includes a list of destitute immigrants arriving at Kingston in 1865. Information includes names/expenses paid.

▸ Montreal.

Various nominal "statements" of immigrants destined for Ontario arriving at the federal immigration agency at Montreal, 1878. (See related records in NA, RG 76, series E).

▸ Quebec City.

(a) Two "destination registers" of arrivals at Quebec destined for Ontario, 1872-1874. Information given is similar to Kingston register, with addition of parish of origin and occupation.

(b) Three "Immigration Aid Fund" registers of British immigrants given special assistance; the nominal portion is dated 1872-1875 and 1879-81. Information given includes: name/name of sponsoring society or emigration agent/country of origin/in some years, details of assistance and ship name.

Included in one of the volumes is a special register of assisted domestic servants, 1879-1881, but individuals' names are given only in 1880.

▸ Paris, France.

Ships' passenger lists (embarkation versions -- "Etats nominatifs des immigrants") for persons leaving via Liverpool in 1873 only, who originated on the Continent (various countries). Submitted by M. Bossange, federal Immigration Agent in Paris. A list of ships covered is available from the collections archivist.

8. BONUS AND ASSISTED PASSAGE RECORDS, 1872-1888 (RG 11, series F, G, I, J, K, L, T, and U; available on microfilm, MS 847 reels 1-5, 8 and 23-27; see attached list). These include various short lists of persons receiving immigration aid, or who were subject to bonuses paid to recruiters. Few of these records are dated after 1875. Some of the certificates and warrants (e.g. series L) were issued by overseas federal (Dominion) Emigration Agents on behalf of the provincial government. A draft nominal transcription for all series is available from the collections archivist; a nominal card index to series I and J only is in preparation: see archivist.

9. FREE RAILWAY PASS RECORDS, 1869, 1872-73, 1879 (RG 11 series N; not on film). A small group of nominal lists of immigrants given railway passes. A nominal transcription is available from the collections archivist.

10. DOMESTICS REGISTER, 1885 (RG 11 series R, box 4; available on microfilm, MS 847 reel 8; see attached list). This is apparently a nominal register of persons in Ontario applying for domestic servants, with lists of the persons assigned to them as servants; dated 4 May-30 November 1885 only.

General RG 11 Records Which May Contain Genealogical Information

11. The general correspondence and letterbooks elsewhere in RG 11 are likely to contain further nominal information about individual immigrants, scattered widely throughout. There are no nominal indexes to any of these items, but see remarks as to existing finding aids, below.

12. IMMIGRATION CORRESPONDENCE FILES, 1869-1899 (RG 11, series H, 1869-1873; series A, 1873-1896; series B, 1869-1894; and series O, 1891-1899. Series A is available on microfilm only, MS 847 reels 9-21; series B is available on MS 847 reel 22; see attached list).

These records total about 15 feet of correspondence on a wide variety of matters relating to immigration and settlement, to and from the provincial immigration office (see para. 3 above). This material is dated 1869-1899 only, and is richer in detail in the earliest period. Occasional

nominal lists of and references to immigrants are scattered throughout. There are letterbooks (see below) but no surviving incoming correspondence, dated after 1899.

Finding aids. (a) A partial finding aid (made by AO) consisting of incomplete document-by-document abstracts exists for series A and B. This is under revision. (b) A letter register to correspondence dated 1867-73 is in RG 11 series C (not on film). (c) A subject index book dated 1867-1873 is in series D (not on film).

13. **LETTERBOOKS AND JOURNALS, 1873-1902 (RG 11 series E, P, and S; no film available).** These are the outgoing portion of the incoming correspondence in the Correspondence Files (para. 12 above). They include letterbooks and daily journals of various departmental officials, dated 1862-1901 (series E), 1873-1902 (series P) and 1874-75 (series S). Occasional nominal lists of and references to immigrants are scattered throughout.

Finding aids: a list of books, by office location and outside date, is available. Most of the individual books are self-indexed (by name of correspondent only; no subject index).

14. **ACCOUNTING RECORDS, 1869-1901 (RG 11 series Q; not on film).** These miscellaneous financial records include some nominal references of peripheral interest to genealogists. Examples include bonus refund journals and assisted passage records, mainly 1869-1880.

How to Consult RG 11

15. Access to RG 11 is not restricted under Freedom of Information/Privacy legislation. However, the RG is still being processed at the AO; consequently those portions not yet on microfilm may only be consulted under the supervision of the archivist. The portions indicated as being on film are available by placing a request at the circulation desk of the Archives of Ontario. They may also be borrowed, under LDS catalogue numbers, through local genealogical reference libraries of the Church of Latter-Day Saints (Mormon Church). Consult the collections archivist, Larry Weiler (1-416-965-6882) for current information and updates.

Other Archives of Ontario Collections Relating to Immigrants.

16. **The pre-Confederation records** relating to settlers, loyalists and aliens have already been mentioned (see para. 2). See the relevant finding aids and consult the reference archivists for assistance.

17. **RG 9 (Ministry of Industry and Tourism;** records are listed in finding aid titled "Economics and Development, Department of") contains a small amount of material on encouragement of immigration, federal-provincial immigration liaison and policy, and the immigration of domestics and other special groups, mainly in the period 1940s-1960s. (See para. 3 for history of this office). More recent records relating to immigrant and refugee arrivals in Ontario have not yet been received at the Archives of Ontario: contact the archivist responsible for immigration records for further information.

18. The AO has numerous holdings of **post-1900 private papers** which contain scattered references to immigration processes in material on multicultural groups: see especially the collections of the Multicultural History Society of Ontario, and of such organizations as the International Institute of Metropolitan Toronto, 1952-74. These and other holdings of peripheral interest are further described in Barbara Craig and Richard Ramsey, eds., Guide to the Holdings of the Archives of Ontario (2 vols., Toronto: Ontario Ministry of Citizenship and Culture, 1985), available in many libraries. Consult the responsible archivist for further information.

19. The AO holds microfilm copies of part of the counterpart **federal immigration records (National Archives of Canada, RG 76, Immigration)** referred to in paras. 4, 5, and 7 above. It is also available from the National Archives on interinstitutional loan. These federal records include some passenger lists, juvenile immigration registers, and subject files of Ontario interest. A summary guide, **"Canadian Records of Immigration and Naturalization at the National Archives of Canada (NA): A Short Guide for Genealogists"**, describes this material; partial finding aids are also available. Contact the National Archives of Canada (395 Wellington Street, Ottawa, Ontario K1A 0N3) for further information.

MS-847 (RECORDS OF THE DEPARTMENT OF IMMIGRATION, 1862-1901 [RG 11])

Reel	Description
1	Series G: Passage Bonus Receipts, 1873-1875
	Series J: Applications for Refund Bonus, 1872-1876
	File 1.1 (Abbey, Jane) - File 3.109 (Crooks, Robert)
2	File 4.1 (Crosbie, George) - File 7.104 (Hopkins, Joseph)
3	File 8.1 (Hopkins, William & Hannah) - File 11.100 (Moore, William)
4	File 12.1 (Moorhead, George) - File 16.60 (Sweetman, Benjamin)
5	File 16.60 (Sweetman, Benjamin) - File 19.49 (Zores, Alexander)
	Series L: Registers of Applications for Passage Warrants, 1872-1888
	Volume 1, [1872]-1887
	Volume 2, Index to Vol. 1 (1873-1883)
	Volume 3, Index to Vols. 1 & 4 (1884-1887)
	Volume 4, 1887-1888
6	Series M: Arrival Destination Records, 1862-1881
	Box/Vol. 1, 1874-1878 (Statistical)
	Box/Vol. 2, Kingston Agency, 1862-1878
	Box/Vol. 3, Montreal Agency, 1878
	Box/Vol. 4, Quebec Agency, 1871 (Statistical)
	Box/Vol. 5, Quebec Agency, 1871 (Statistical)
	Box/Vol. 6, Quebec Agency, 1872 (Statistical)
	Box/Vol. 7, Quebec Agency, 1873-1874 (Statistical)
7	Box/Vol. 8, Quebec Agency, 1872-1873
	Box/Vol. 9, Quebec Agency, 1873-1874
	Box/Vol. 10, Quebec Agency, 1872-1873
	Box/Vol. 11, Quebec Agency, 1874-1875
8	Box/Vol. 12, Assisted Immigrants, 1875, 1879-1881
	Box/Vol. 13, Paris Agency, 1873
	Box/Vol. 14, Toronto Agency, 1868-1881 (Statistical)
	Series R: Miscellaneous Records, 1869-1896 & n.d.
	Box/Vols. 1 - 5
	Series T: Bonus Certificate/Advance Bonus Lists, 1872-1874
	Series U: Refund Bonus Lists, 1872-1875

Reel	Description
9	Series A: Numbered Correspondence, 1873-1897
	#2328 (1873) - #4441 (1875)
10	#4442 (1875) - #4983 (1875)
11	#5455 (1876) - #5964 (1877)
12	#5965 (1877) - #6353 (1877)
13	#6354 (1877) - #6884 (1878)
14	#6653 (1878) - #7115 (1878) [Some overlap]
15	#7116 (1878) - #7441 (1879)
16	#7441 (1879) - #8750 (1879) #35 (1875) - #70 (1875)
17	#70 (1875) - #78 (1875) #67 (1880) - #789½ (1880)
18	#790 (1880) - #2701 (1883)
19	#2702 (1883) - #3195 (1884) #365 (1884) - #1109 (1887) #786 (1890) - #2235 (1894)
20	#2235 (1894) - #3025 (1895)
21	#3026 (1895) - #4097 (1897)
22	Series B: Unnumbered Correspondence, 1869-1897 & n.d.
	#1 (1869) - #359 (no date)
23	Series F: Assisted Passage Certificates, 1872-1873
	Barrand - Perrin
	Series I: Refund Bonus Certificates, 1873-1874
	File 1.1 (Abraham, Robert) - File 4.45 (Cyples, William)
24	File 5.1 (Dale, Thomas) - File 8.95 (Lamont, Hugh)
25	File 8.95 (Lamont, Hugh) - File 11.125 (Owens, William
26	File 12.1 (Page, Patrick) - File 14.103 (Thompson, Emily)
27	File 15.1 (Thompson, Henry J.) - File 16.46 (Young, William & Family)
	Series K: Six Dollar Bonus Certificates, 1875

How to Find an Indexed Individual in the Census

To find an indexed individual in the 1871 census, locate the name of the municipality and the National Archives of Canada microfilm reel number using the numerical table below. The first part of the code identifies the Electoral District (frequently but not always corresponding to county or city), the second the Sub-District (corresponding to township, town, village, or city ward), the third the enumerator's division, and the final column the page number. The names and code numbers of the Districts, Sub-Districts, and Divisions, as well as the page numbers, appear at the top of each page of the original microfilmed census. Thus an individual for whom the location reference reads

059 E 2 11

was resident in the Town of Picton, Prince Edward County (059 E), and can be located on the 11th page of the 2nd division of Picton, on reel C-9990.

The codes for Hastings and Prince Edward follow.

District	Sub-District	Division	National Archives Microfilm Reel No.
059. PRINCE EDWARD	A. Hillier	1-2	C-9989
	B. Wellington village		C-9989
	C. Ameliasburgh	1-3	C-9989
	D. Hallowell	1-3	C-9989
	E. Picton town	1	C-9989-90
		2	C-9990
	F. Sophiasburgh	1-2	C-9990
	G. Athol	1-2	C-9990
	H. Marysburgh South	1-2	C-9990
	I. Marysburgh North	1-2	C-9990
060. HASTINGS WEST	A. Sidney	1	C-9990
		2-3	C-9991
	B. Trenton village		C-9991
	C. Belleville town	1-3	C-9991
		4	C-9991-92
061. HASTINGS EAST	A. Thurlow	1-3	C-9992
	B. Tyendinaga	1-2	C-9992
		3	C-9992-93
		4	C-9993
	C. Hungerford	1-3	C-9993
062. HASTINGS NORTH	A. Rawdon	1-4	C-9993
	B. Stirling village		C-9993
	C. Huntingdon	1-2	C-9994
	D. Marmora & Lake	1-2	C-9994
	E. Madoc	1-3	C-9994
	F. Elzevir & Grimsthorpe	1-3	C-9994
	G. Tudor	1	C-9994
	G. Wollaston, Limerick, & Cashel	2	C-9994
	H. Carlow & Mayo		C-9994
	I. Faraday & Dungannon		C-9994-95

J. Herschel, Monteagle, McClure, Wicklow, and Bangor	1-2	C-9995

A page number "D" indicates an entry in the Deaths Schedules, microfilmed immediately following the personal schedules for each division. Some local libraries still have an old microfilm version of the 1871 census in which only the personal schedules are included; if this is true of your library, you will have to obtain the new films from Ottawa to consult the deaths schedules.

SURNAME	NAME1	NAME2	STRAY	SEX	AGE	BIRTHPL	RELIGION	ORIGIN	OCCUP	DIST	SUB_DIST	DIV	PAGE
BROWN	WILLIAM				41	ENGLAND	WM	ENGLISH	FARMER	059	I	2	2
BROWN	WILLIAM	H			38	O	WM	SCOTCH	FARMER	059	I	2	3
BROWN	WM		1		23	ENGLAND	NG	ENGLISH	SCHOOL TEACHER	062	A	2	41
BROWSON	MINER		1		40	O	WM	ENGLISH		062	D	1	64
BRUCE	MARGARET			1	20	ENGLAND	CS	SCOTCH		060	C	1	B9
BRUCE	MARGARET		1	1	19	O	CP	IRISH		059	E	2	21
BRUCE	ROBERT				26	O	CS	SCOTCH	FARMER	062	H		15
BRUCE	THOMAS				23	O	CP	SCOTCH	FARMER	062	H		1
BRUCE	WILLIAM		1		30	IRELAND	EM	IRISH	LABORER	060	A	2	41
BRUETTE	NARSCIS				30	QUE	RC	FRENCH	BROKERMAN	060	C	1	23
BRUEYEA	ONTWINE		1		67	O	RC	FRENCH	F	062	F	2	15
BRUGARD	DAVID		1		18	O	WM	DUTCH	STORE CLERK	059	E	2	65
BRUIN	JOHN				36	IRELAND	WM	IRISH	CARRIAGEMAKER	061	B	2	70
BRUMBLE	SAMUEL	J	1		12	O	CE	ENGLISH	FARM SERVANT	059	F	1	5B
BRUMMEL	JOHN		2		50	ENGLAND	CE		SHOE MAKER	059	E	2	D
BRUMMEL	MARIA			1	38	ENGLAND	CE	ENGLISH		059	E	2	1
BRUMMEL	MATILDA		2	1	16	O	CE			059	E	2	0
BRUMMELL	SAMUEL				56	ENGLAND	NR	ENGLISH	FARMER	059	F	1	67
BRUNET	ISOORE				44	QUE	RC	FRENCH	CAPTAIN	059	C	1	28
BRUNO	BABTEESE				44	QUE	RC	FRENCH	LAB	062	D	1	74
BRUNSON	JOHN				41	O	WM	ENGLISH	F	062	A	3	39
BRUNSON	LEWIS				44	O	WM	ENGLISH	F	062	A	3	39
BRUNSON	MARTON				82	O	WM	ENGLISH		062	A	3	39
BRUNSON	SIMON				27	O	WM	ENGLISH	F	062	A	3	39
BRUNTON	LIZZY		1	1	16	O	CS	SCOTCH		059	I	1	26
BRUYA	FRANK				37	O	RC	FRENCH	F	062	F	2	11
BRUZI	ELIZABETH		1	1	30	O	CE	ENGLISH		062	F	1	40
BRUZI	JOHN				2B	O	CE	ENGLISH	CLERK	062	F	1	32
BRYANT	CHARLES				23	O	ME	GERMAN	LABOURER	060	A	1	21
BRYANT	JOHN		1		32	ENGLAND	WM	ENGLISH	CARPENTER	060	C	4	78
BRYANT	JOHN	C	1		19	O	QU	GERMAN		059	D	3	11
BRYANT	JOSEPH				52	O	QU	GERMAN	LABOURER	060	A	1	22
BRYANT	JOSEPH				42	O	WM	IRISH	SHOEMAKER	060	B		29
BRYANT	JOSEPH				21	ENGLAND	CE	ENGLISH	LAB	061	A	2	66
BRYANT	SAMUEL				52	O	CE	GERMAN	FARMER	059	C	1	70
BRYANT	WILLIAM				36	O	QU	GERMAN	PAPERMAKER	060	A	1	29
BRYOON	HENRY				40	ENGLAND	CE	ENGLISH	FARMER	062	C	1	79
BRYER	ANNA		1	1	20	ENGLAND	CE	ENGLISH	SERVANT	059	C	1	75
BRYOON	WILLIAM				62	SCOTLAND	CP	SCOTCH	BAKER	060	C	2	14
BRYSON	JOHN				40	IRELAND	RC	IRISH	FARMER	061	B	4	61
BRYSON	OWEN				5B	IRELAND	RC	IRISH	WEAVER	061	B	4	63
BUCHANAN	A	W			55	SCOTLAND	CE	SCOTCH	F	059	A	2	44
BUCHANAN	ANDREW				28	O	CP	IRISH	BUTCHER	059	E	2	15
BUCHANAN	THOMAS				35	IRELAND	CE	IRISH	FARMER	059	C	1	72
BUCHANAN	WM				67	IRELAND	CP	IRISH	LAB	059	E	2	23
BUCK	ANNA		2	1	1	O	CE			062	A	2	0
BUCK	RICHARD				35	ENGLAND	CE	ENGLISH	HOTELKEEPER	062	A	2	1
BUCKDOE	JOSEPH		1		45	QUEBEC	RC	FRENCH	LABORER	060	A	2	41
BUCKINGHAM	CLARA		1	1	7	ENGLAND	WM	ENGLISH		062	C	1	63
BUCKINGHAM	JANE		1	1	11	ENGLAND	WM	ENGLISH		062	C	2	21
BUCKLEY	CHARLES		1		14	ENGLAND	FK	ENGLISH		059	F	2	20
BUCKLEY	MICHAEL				69	IRELAND	PS	IRISH		061	B	4	27
BUCKLEY	PATRICK				40	IRELAND	RC	IRISH	FARMER	061	B	4	27
BUCKLEY	WILLIAM				44	IRELAND	RC	IRISH		060	C	3	97
BUCKLY	WILLIAM				31	ONTARIO	RC	IRISH	FARMER	061	B	4	20
BUCKNER	CHARLES				40	O	CE	AFRICAN	LAB	060	C	3	42
BUCKOUT	E	M	1	1	17	O	EM	IRISH	SERVANT	059	C	2	40
BUDERAUX	TILSON				29	O	RC	FRENCH	F	062	F	1	21
BUDERAUX	WM				26	O	RC	FRENCH	F	062	F	1	21
BUDNEY	ANDREW		1		50	QUEBEC	RC	FRENCH	COOPER	062	H		4
BUEHAN	REV	ALEX			68	SCOTLAND	CS	SCOTCH	MINISTER	062	B		2
BULGER	C	THOMAS	1		28	O	RC	IRISH	PORTER	060	C	1	54
BULGER	ELIZA			1	38	IRELAND	RC	IRISH		060	C	1	40
BULGER	ELLEN			1	36	IRELAND	RC	IRISH		060	C	1	14
BULGER	JAMES				26	IRELAND	RC	IRISH	TEAMSTER	060	C	4	80
BULGER	RICHARD		1		32	O	RC	IRISH	CLERK	062	D	1	35
BULGER	THOMAS		1		20	O	RC	IRISH	POTTER	060	C	1	54
BULL	ALBERT				31	O	UV	ENGLISH	CARPENTER	059	O	2	57
BULL	COREY	S			63	O	QU	ENGLISH	F	059	O	2	53
BULL	GEORGE				51	O	CE	ENGLISH	CARRIAGEMAKER	062	B		15
BULL	GILBERT				37	O	UV	GERMAN	F	059	D	2	57
BULL	HENRY				44	QUE	CE	ENGLISH	CLERK	060	B		32
BULL	HIRAM				51	O	CE	GERMAN	F	059	D	3	7
BULL	HIRAM				51	O	CE	GERMAN	F	059	D	1	7
BULL	JOHN				37	QUE	CE	ENGLISH	CLERK	062	E	1	B
BULL	JOHN				55	O	UV	GERMAN	F	059	D	2	53
BULL	JOHN				36	O	EM	ENGLISH	FARMER	059	F	2	50
BULL	JOSEPH				45	ENGLAND	CE	ENGLISH	LABORER	060	A	2	2
BULL	SAMUEL		1		72	O	CE	ENGLISH	MERCHANT	060	B		44
BULL	SELLICK				32	O	WM	GERMAN	F	059	D	2	56
BULLEN	HENRY				45	IRELAND	WM	IRISH	CLERK	060	C	4	20

daughter of the late Charles Bowman, of Little Court, Hertfordshire. (Bishop of Toronto)

22 Nov 1844: On Saturday, 16th inst., at St. James's Cathedral, Henry Price, to Sarah, second daughter of Richard Watson, of the firm of Watson & Stanton, senior proprietor of the British Canadian, and Publisher of the Upper Canada Gazette; all of Toronto. (Rev. H. J. Grasett)

ibid. At the Cathedral Church of St. James, on 14th inst., Thomas Moore, barrister-at-law, to Maria Mellon, of Toronto. (Rev. H. J. Grasett)

29 Nov 1844: On Monday, 25th inst., at Moira Cottage, near Cobourg, at the residence of Morgan Jellett, Thomas V. Tupper, of Cavanville, to Anna Sophia, daughter of Morgan Jellett, of Ballymena, Ireland. (Rev. Jonathan Shortt)

13 Dec 1844: At Burford, on 4th inst., John Simmerman, second son of Captain Mathias Simmerman, of the same place, to Harriet Vandousin, of the township of Oakland. (Rev. George Petrie)

10 Jan 1845: At Toronto, on Wednesday 1st inst., R. W. Clendenning, printer, to Jane, second daughter of Donald McLean.

17 Jan 1845: At Bytown, on 7th inst., Helier Vavasour Noel, to Barbara Catherine, youngest daughter of William Clegg, Royal Engineer Department.

24 Jan 1845: On 21st inst., Sidney Smith, solicitor &c., to Mary Anne, eldest daughter of Glover Bennett, all of Cobourg. (Rev. Chas. Ruttan)

ibid. In St. Peter's Church, Cobourg, on 22nd inst., David Grieve, of this town, to Margaret Franklin, of the village of Colborne. (Rev. A. N. Bethune)

ibid. At Perth, on 15th inst., William Oscar Buell, to Mary Elizabeth, eldest daughter of the Rev. Michael Harris, Rector of Perth. (Rev. James Padfield)

ibid. On 16th inst., at St. James's Cathedral, Toronto, M. Betley, merchant, of that city, to Diana Emily, widow of the late George Brown, of Albany. (Rev. H. J. Grasett)

14 Feb 1845: At Cavan, on 11th inst., Arthur Henry Peck, of Otonabee, to Mary, eldest daughter of the Rev. Samuel Armour, Rector of Cavan.

ibid. On 11th inst., Robert Wilkinson, of Cavan, to Mary,

GEORGE GLASSBRENNER, (Lebanon.)
Glassbrenner—Maria Christiana Margaretha, b. Feb. 28, 1741; bap. March 25, 1741. Sponsors, Andreas Weltz and wife and Margaretha Glassbrenner.

MICHAEL KLEBER, (Swatara.)
Kleber—George Ludwig, b. July 4,1736; bap. Sept. 12, 1736. Sponsors, George Ludwig Friedle and wife.
—— Anna Maria, b. Sept. 4, 1738; bap. Jan. 30, 1739. Sponsors, Heinrich Klein and wife.
—— Michael, b. March 1, 1740; bap. March 26, 1741. Sponsors, Heinrich Klein and wife Anna Maria.
—— Barbara, b. Feb. 25, 1744; bap. March 18, 1744. Sponsors, Ottmar Schnabele and wife Barbara.
—— Susanna, b. Feb. 19, 1749; bap. March 19, 1749. Sponsors, Martin Speck and wife Susanna.

MARTIN KIRSTAETTER, (Lebanon.)
Kirstaetter—John, b. Sept. 3, 1739; bap. Nov. 5, 1739. Sponsors, John Schmeltzer and his wife.
——Julianna, b. Jan. 25, 1741; bap. March 25, 1741. Sponsor, Julianna Umberger.

ANDREAS KRAEMER. (Swatara.)
Kraemer—Andreas, b. Feb. 8, 1741; bap. March 26, 1741. Sponsors, Martin Kappler and wife Margaretha.
—— John George, b. Feb. 12, 1746; bap. March 16, 1746. Sponsors, John George Einert and wife.

MICHAEL HAHN, (Conestoga.)
Hahn—John Michael, b. Jan. 31, 1741; bap. March 27, 1741. Sponsors, John Michael Quickel.

HEINRICH SCHAEFER, (Conestoga.)
Schaeffer—Anna Margaretha, b. Jan. 9, 1741; bap. March 27.1741. Sponsor, Anna Margaretha Budinger.

JACOB SPANNSEILER, (Lancaster.)
Spannseiler—Catarina, b. March 19, 1741; bap. March 27, 1741. Sponsor, CatarinaBerlin.

PETER HEYLMANN.
Heylmann—Johannes, b. Dec. 11, 1744; bap. Jan. 6, 1745. Sponsors. Anastasius Uhler and wife Dorothea.

STEPHEN TRAENCKEL, (Lancaster.)
Traenckel—Catarina. Sponsors, Jacob Spannseiler and wife.

CHRISTIAN LOEFFEL, (Conewago.)
Loeffel—Anna Margaretha. b. Feb. 28, 1738; bap. May 22, 1738. Sponsor, Catarina Baumann.
—— John Peter, b. Jan. 2, 1741; bap. April 5, 1741. Sponsors, John Peter Schultz and wife Anna Catarina.

HEINRICH MEYER, (Lebanon.)
Meyer—Christoph, b. Oct. 20, 1736; bap. Nov. 19, 1736. Sponsors. Christoph Meyer and wife Anna Rosina.

NICOLAUS KLEE, (Conewago.)
Klee—Anna Margaretha, b. March 9, 1741; bap. April 5, 1741. Sponsors, Jacob Beerling and wife Anna Margaretha Euler.

MARTIN ERNST, (Conewago.)
Ernst—Eva, b. Dec. 26, 1740; bap. April 5, 1741. Sponsors, Andreas Herger and wife Eva.

WILLIAM WILSON, (Conewago.)
Wilson—John, b. Nov. 6, 1740; bap.April 5, 1741. Sponsor, Philip Morgenstern.

JOHN OWEN, (Conewago.)
Owen—William, b. March 28, 1741; bap. April 5, 1741. Sponsors, Daniel Schlaegel and sister Catarina.

WILLIAM MORPHEW, (Conewago.)
Morphew—Henry, b. Nov. 25, 1740; bap. April 5, 1741. Sponsors, Christoph Schlaegel and his wife.

WILLIAM WELSH, (Codorus.)
Welsh—John Peter, b. Oct., 1740; bap. April 5, 1741. Sponsors,Jacob Welsch and wife.

JOHN DIETRICH ULRICH, (Codorus.)
Ulrich—Rosina, b. Dec. 28, 1740; bap. April 5, 1741. Sponsors, John Adam Rupert and wife Anna Barbara.

JOHN FUNCK, (Codorus.)
Funck—Catarina, b. March 5, 1741; bap. April 5, 1741. Sponsor, Catarina Loewenstein.

JOHN WOLF, (Codorus.)
Wolf—Elizabetha, b. Dec. 9, 1740; bap. April 5, 1741. Sponsors, Carl Eisen and wife .

GEORGE LOEWENSTEIN, (Codorus.)
Loewenstein—Maria Elizabetha, b. Nov. 27, 1740; bap. April 5, 1741. Sponsors, Daniel Diehl and his wife.

JOHN GEORGE MAEUNTZER, (Lancaster.)
Maeuntzer — Elizabeth Catarina, b. April 13, 1741; bap. May 16, 1741. Sponsors, Jacob Spannseiler and his wife.
—— Anna, Catarina, b. May 23, 1742; bap. July 18, 1742. Sponsors, George Buerger and his wife.
—— George Jacob, b. Nov. 18, 1744; bap. Feb. 3, 1745. Sponsors, George Buerger and wife and Jacob Wolf.

—— Anna Dorothea, b. Nov. 17, 1746; bap. March 29, 1747. Sponsors, Jacob Wolf and his wife.

TOBIAS HEINRICH, (Codorus.)
Heinrich—John, b. Mch. 9, 1741; bap. May 17, 1741. Sponsors, John Wolf and his wife.

JACOB JUNGBLUT, (Conewago.)
Jungblut—John Jacob, b. Mch. 13, 1739; bap. Nov. 13, 1739. Sponsors, Leonhardt Bernitz, Casper Kuehner, Anna Catarina Kuntz and Hanna Jungblut.

ERASMUS HOLZAPFEL, (Codorus.)
Holzapfel—B. Aug. 25, 1740; bap. May 17, 1741. Sponsors, John Adam Rupert and his wife.

WEIRICH RUDIESIEL, (Codorus.)
Rudiesiel—Anna Johanna, b. Dec. 28, 1740; bap. May 17, 1741. Sponsors, Jacob Ottinger and Ana Johanna Igsin.

HEINRICH DEVIS, (Conewago.)
Devis—Catarina, b. Jan. 6, 1741; bap. May 18, 1741. Sponsors, Peter Schultz and his wife Catarina.

JOHN JACOB KLUND, (Conewago.)
Klund—John Adam, b. Feb. 11, 1741; bap. May 18, 1741. Sponsors, John Adam Soll and Catarina Elizabeth Speugel.

JOHN BIRDMAN, (Conewago.)
Birdman—Catarina, b. April 20, 1741; bap. May 18, 1741. Sponsors, Elias Daniel Bernitz and his wife, also Catarina Berghoester.

ANTONIUS HEUTELER, (Conewago.)
Heuteler—John Mattheis. b. Sept. 19, 1738; bap. Oct. 16, 1738. Sponsors, John Mattheis Maercker and his wife.
—— Antonius, b. April 5, 1741; bap. May 18, 1741. Sponsors, Daniel Speugel and Magdal. Winterbauer.

SEBASTIAN WINTERBAUER, (Conewago.)
Winterbauer—Maria Susanna, b. 1738; bap. 1738. Sponsors, Heinrich Vadis and Susanna Heissmann.
—— Sybilla, b. Aug. 30, 1740; bap. May 18, 1741. Sponsors, Michael Schaeufle and Maria Sybilla Weiss.

PHILIPP BENTZ, (Kreutz Creek.)
Bentz—Christian, b. Mch. 30. 1741; bap. May 19, 1741. Sponsors, John Christian Groll. John Jost Sultzbach and Barbara Weller.

C21 JACOB VERDRIESS. (Monocacy.)
Verdriess—Catarina, b. Mch., 1739; bap. June 24, 1741.
C22 —— Johannes, b. April 27, 1741; bap. June 24, 1741. Sponsors, for both, Philipp Ernst Gruber and wife, and also John Valentin Verdriess.

JEREMIAS ELLRADT, (Monocacy.)
Ellradt—Elisabetha, b. April 16, 1741; bap. June 24, 1741. Sponsors, Dietrich Ellradt and his wife.

FREDERICH TRANBERG, (Conewago.)
Tranberg—Christina Barbara, b. Sept. 29, 1740; bap. June 25, 1741. Sponsors, Christian Loefel and Anna Christina Baumann.

NICOLAUS LAYENBERGER, (Conewago.)
Layenberger—John George, b. June 13, 1741; bap. June 25, 1741. Sponsors, Joh. George Kuntz and Catarina Baulinger.

FREDERICH KREUTER, C31 (Conewago.)
Kreuter—Anna Margaretha, b. May 15, 1741; bap. June 25, 1741. Sponsors, Cunradt Euler and his wife.

JACOB WELSCH, (Codorus.)
Welsch—John Jacob, b. May 20, 1741; bap. June 26. 1741. Sponsors, John Jacob Ottinger and Hannah Jost.

MARTIN BAUER, (Codorus.)
Bauer—A son (name wanting), b. May 2, 1741; bap. June 26, 1741. Sponsors, John Peter Wolf, Jacob Welsch and Veronica Baseler.

ULRICH BUETZER, (Krentz Creek.)
Buetzer—John Christian, b. Dec. 18, 1740; bap. June 26, 1741. Sponsors, John Christian Groll and his wife.

JOHN SCHMELTZER, (Swatara.)
Schmeltzer—John Peter, b. Dec. 8, 1738; bap. Jan. 30, 1739. Sponsors, Peter Kucher and his wife.
—— Johannes, b. April 11, 1741; bap. June 2, 1741. Sponsors, Peter Kucher and his wife Barbara.
—— Sabina, b. Sept. 2, 1746; bapt. Sept. 14, 1746. Sponsors, Thomas Kreugel and his wife Margaretha.

LEONHARD KNEDY. (Codorus.)
Knedy—Isaac, b. July 2, 1741; bap. Aug. 20, 1741. Sponsors, Isaac Laudenbusch and his wife.

JOST MOHR, (Codorus.)
Mohr—Eva Catarina, b. July 3, 1741; bap. Aug. 20, 1741. Sponsors, Marx Heus and Eva Catarina Iserlin.

JOSEPH BEREN, (Codorus.)
Beren—Frederick, b. July 20, 1741; bap. Aug. 20, 1741. Sponsors, John Frederich Baseler and wife Veronica.

MICHAEL KRUEGER, (Codorus.)
Krueger — Elias. Sponsor, Michael Rausch.

WILLIAM MORGON, (Codorus.)
Morgon—Elisabetha, b. Jan., 1741; bap.

May 22. Johannes Dierdorf and Margaretha Ehrhardt, Conewago.
May 22. John George Schmeiser and Barbara Stambach, Codorus.
May 27. John Michael Ehrhardt and Catarina Elisabetha Lesch, Tulpehocken.
May 27. George Michael Kittner and Maria Catar, Friederich, Tulpehocken.
May 27. John Philipp Maurer and Catarina Rameler, Tulpehocken.
June 8. Andreas Eul and Catarina Margar Hoffman, Warwick.
July 24. Stephan Rausch and Anna Dorothea Ziegler, Earl Town.
July 28. John George Arnold and Hannah Knopf, Tulpehocken.
August 11. John George Riedt and Margaretha Filich, Earl Town.
August 11. Jacob Bauman and Elizabetha Rueger, Earl Town.
August 20. Balthasar Schoenberger and Anna Margar. Zwickel, Conojahela.
Sept. 19. Johannes Iuengling and Margaretha Elenora Beuckert, Conewago.
Sept. 19. Friederich Kreuter and Anna Barbara Euler, Conewago. C3
Sept. 23. Albinus Beyer and Anna Maria Steutz, Codorus.
Oct. 5. John George Bohrmann and Agnes Doerr, Warwick.
Oct. 25. George Heard and Elenore Boyd, Warwick.
April 29. Carl Eisen and Rebecca Hamspacher, Codorus.
Nov. 9. Johannes Braun and Eva Kueffer, Tulpehocken.
Nov. 25. John Waters and Sarah Hopkins, Conewago.
Dec. 8. Andreas Kapp and Regina Sophia Siegmann, Tulpehocken.
Dec. 9. Nicolaus Geiger and Anna Margaretha Feg, Tulpehocken.
Dec. 26. John Daniel Diehl and Anna Maria Elisabetha Simon, Warwick.
Dec. 26. John Adam Simon and Maria Elisabetha Diehl, Warwick.

1741.

Jan. 19. Valentin Bentz and Maria Catarina Oberlin, Cocalico.
Jan. 23. John Heinrich Wilhelm and Catarina Haermaennin, Swatara.
Feb. 10. George Jacob Schnuerer and Catarina Bohrmann, Warwick.
Feb. 17. Jacob Holtzinger and Maria Veronica Wittmeyer, Cocalico.
March 27. John Peter Volck and Anna Maria Boetten (a Quaker), Conestoga.
March 30. John Leacock and Esther Eshender, Martick Township.
April 5. James Hinds and Margaretha Skarl, Great Conewago.
April 5. John Martin Mannsperger and Margaretha Nuesch, Codorus.
April 8. John Simon Eitlen and Anna Magdalena Kintz, Earl Town.
April 12. Thomas Greuel and Margaretha Koellmer, Tulpehocken.
April 12. Jacob Zorn and Anna Maria Gotteskind, Tulpehocken.
April 12. Gottfried Lautermilch and Anna Margaretha Meyer, Tulpehocken.
April 27. Abraham Wendel and Barbara Straup, Earl Town.
June 7. John Jacob Sauebert and Susanna Schuetz, Tulpehocken.
June 9. Michael Lauer and Maria Barbara Frey, Moden Creek.
July 6. John Weidman and Margaretha Hausshalter, Cocalico.
July 20. Christian Rotenbach and Magdalena Wagner, Cocalico.
July 26. John Michael Quickel and Barbara Mueller, Conestoga.
Aug. 4. John Michael Haagmeyer and Eva Frederica Weidman, Conestoga.
August 20. Jacob Otlinger and Anna Johanna Josie, Codorus.
August 20. George Adam Zimmerman and Anna Maria Motz, Codorus.
Sept. 29. John Flatsher and Abernie Kare, Mash Creek.
Oct. 6. Ulrich Buerger and Magdalina Binckel, Moden Creek.
Oct. 13. Engelhardt Flohry and Elisabetha Zerw, Tulpehocken.
Oct. 20. Nicolaus Roils and Catarina Margar. Schneider, Moden Creek.
Oct. 26. Adam Guellin and Rebecca Worley, Conestoga.
Nov. 10. Samuel Pickerstaff and Elisabeth Moor, Cana Shicken.
Nov. 17. John Christoph Traenckel and Anna Maria Spengler, Lancaster.
Nov. 21. James Tennin and Elisabeth Adams, of Swatara.
Nov. 26. Gehrhardt Zimmerman and Elisabetha Beyer, Lancaster.
Dec. 6. John Christian Schmidt and Juliana Pohin, Tulpehocken.
Dec. 7. Nicolaus Jungblut and Anna Maria Kappler, Tulpehocken.
Dec. 14. John Michael Biegler and Susanna Reuscher, Conewago.
Dec. 14. John Geo. Ulrich and Catarina Sell, Conewago.
Dec. 21. Jacob Kuehports and Maria Elis. Haehnlin, Pequea.
Dec. 28. Martin Stuep and Anna Susanna Wallbort, Tulpehocken.

1742.

Jan. 3. Nicolaus Kintzer and Anna Catara. Hoester, Quittapahilla.
Jan. 9. Jacob Storm and Maria Saurin, Earl Town.
Jan. 24. Johannes Mueller and Anna Barbara Schuppinger, Tulpehocken.

Jan. 25. Jacob Vollmar and Justina Kaercher, Tulpehocken.
Jan. 26. Christian Gruber and Anna Kueuingunde Stulp, Tulpehocken.
Jan. 26. Stephan Cunradt and Anna Catarina Stahlschmidt, Tulpehocken.
Feb. 23. James Waite and Catarina Evans, Earl Town.
Feb. 24. George Stephan Mann and Maria Catarina Mueller, Lancaster.
March 7. Johan George Kintz and Maria Elizabetha Quickel, Lancaster.
March 9. Michael Kissinger and Catarina Roland, Cocalico.
March 16. Melchior Heiter and Anna Maria Amborn, French Creek.
March 22. John Abraham Leppo and Anna Margaretha Schueler, Swatara.
March 26. John Christian Schneider and Maria Magdalena Schaeffer, Earl Town.
March 26. Maurice Skullin and Bridgitte Conally, Salsbury.
March 29. Joseph Obold and Elizabetha Hausshalter, Cocalico.
April 7. Michael Mueller and Barbara Stucker, Codorus.
April 7. Antony Hinds and Anna Canaan, Conojohela.
April 18. Leonardt Umberger and Barbara Borst, Lebanon.
April 16. John Wendel Heyl and Anna Trotter, Bethel.
April 26. John George Emmert and Eva Maria Graff, Heidelberg.
April 26. John Immel and Anna Barbara Lay, Tulpehocken.
April 27. Christoph Witter and Christiana Roeser, Cocalico.
April 27. John Philipp Stoer and Anna Maria Holder, Warwick.
April 29. Valentin Frey and Anna Barbara Meyer, Moden Creek.
April 29. Martin Frey and Susanna Catarina Ensminger, Moden Creek.
May 11. Nicolaus Martin and Eva Stover, Warwick.
May 11. Jacob Neff and Christina Stober, Warwick.
May 16. Michael Scholl and Anna Margaretha Helwig, Tulpehocken.
May 16. Adam Helwig and Sophia Scholl, Tulpehocken.
May 16. John Gilbert and Elizabetha Pannel, Swatara.
May 16. John Kuehny and Elizabetha Cars, Swatara.
June 8. Abraham Neff and Anna Christina Loesh, Tulpehocken.
June 9. John Welsh and Anna Sharp, Lebanon.
July 4. Nicolaus Marret and Magdalena Eub, Warwick.
July 31. Philipp Linn and Catarina Buschfeld, Codorus.
July 31. Gottfrey Frey and Margaretha Linn, Codorus.
August 8. Peter Wolf and Hanna Wolf, Tulpehocken.
August 16. John Christoph Schupp and Anna Margaretha Pokin, Moden Creek.
August 17. Heinrich Spanhauer and Anna Elizabeth Linn, Lancaster.
Oct. 11. John Peter Schmidt and Eva Resina Fauth Manakasy.
Oct. 11. James Conner and Anne Catarina Ellrodt, Manakasy.
Oct. 16. Gotthardt Dressel and Anna Maria Weill, Warwick.
Oct. 18. Michael Umberger and Anna Maria Ramler, Tulpehocken.
Oct. 19. John Heinrich Ensminger and Christina Ouir, Cocalico.
Oct. 24. Thomas McCarthy and Margaretha Dill, Conewaga.
Oct. 29. Casper Loewe and Margaret Esskuch, Lebanon.
Oct. 31. Ludwig Knopf and Margaretha Fraelich, Tulpehocken.
Nov. 19. John Michael Oberlin and Christina Zwecker, Earl Town.
Nov. 24. John Causseler and Maria Catarina Pfleuger, Codorus.
Nov. 24. John Bichszler and Magdalena Krohbiel, Codorus.
Nov. 24. Carl Thiel and Maria Elizabetha Ehrhardt, Codorus.
Nov. 28. John Peter Schmidt and Maria Margaretha Huber, Tulpehocken.

1743.

Jan. 6. Andreas Ketterle and Catarina Barbara Becher, Lebanon.
Jan 14. John Pontius and Anna Catarina Zoeller, Tulpehocken.
Jan. 17. William Crogge and Catharine Kenny, Earl Town.
Jan 18. Valentin Stober and Eva Elizabetha Beyer, Warwick.
Jan. 23. Philipp Petry and Susanna Juliana Emmert, Northkill.
Jan. 25. Martin Beyer and Anna Barbara Staehlin, Warwick.
Feb. 1. John Jacob Stober and Anna Catarina Naess, Warwick.
Feb. 8. Heinrich Bauer and Margaretha Bauer, Earl Town.
Feb. 10. John Cox and Mary Cresswell, Salisbury.
Feb. 20. John George Huber and Catarina Hoster, Tulpehocken.
Feb. 24. Sebastian Naess and Margaretha Gross, Cocalico.
Feb. 27. Jacob Reuter and Anna Maria Frey, Moden Creek.
March 13. John David Schaeffer and Anna Catarina Simon, Codorus.

PETER MARCKER, (Swatara.)
Marcker—Maria Elizabetha, b. April 21, 1743; bap. May 23, 1743. Sponsors, Christoph Zimmer and his wife.
—— Julianna, b. Feb. 3, 1746; bap. March 3, 1746. Sponsors, Adam Ulrich and his wife Juliana.
—— Catarina, b. Feb. 4, 1751; bap. March 17, 1751. Sponsors, George Mueller and his wife.

JOHN ADAM LOEFFLER, (Lancaster.)
Loeffler—George Ludwig, b. April 4, 1742; bap. April 8, 1742. Sponsors, George Graf and his wife, also Ludwig Heinrich Dettborn.

MARTIN HOFFMANN, (Hempfield.)
Hoffman—John Andreas, b. March 14, 1742; bap. April 4, 1742. Sponsor, Andreas Hoffman.

JOHN TITTLE, deceased, (Swatara.)
Tittle—Peter, b. Sept. 20, 1742; bap. April 27, 1747. Sponsors, George Meyer and his wife.

JONAS WOLF, (Lebanon.)
Wolf—John Jacob, b. Jan. 4, 1742; bap. April 15, 1742. Sponsors, John Jacob Kaemmerling and his wife.
—— John Herman, b. Aug. 5, 1743; bap. Aug. 28, 1743. Sponsors, Herman Trott and his wife.
—— Anna Maria, b. Jan. 7, 1745; bap. Jan. 19, 1745. Sponsors, Herman Trott and his wife.
—— Simon, b. Oct. 28, 1746; bap. Dec. 7, 1746. Sponsors, George Wagner and wife Anna Elizabetha.

JOHN ALBRECHT SIECHELE, (Lebanon.)
Siechele—John Peter, b. March 7, 1741; bap. April 15, 1742. Sponsors, Peter Kucher and his wife.
—— Eva Barbara, b. Oct. 2, 1744; bap. Oct. 28, 1744. Sponsors, Peter Kucher and his wife.

JACOB FROELICH, (Lebanon.)
Froelich—Anna Catarina, b. Oct., 1741; bap. April 15,1742. Sponsors, Buerger and his wife.

WILLIAM KALLY, (Lebanon.)
Kally—Sarah, b. April 6, 1742; bap.April 15, 1742. Sponsors,Andreas Wolf and his wife.

HEINRICH WILHELM, (Swatara.)
Wilhelm—Maria, b. Dec. 4, 1741; bap. April 16, 1742. Sponsor, Magdalena Homann.
—— John Philipp, b. Jan. 28,1743; bap. July 19, 1743. Sponsors, Philipp Lorentz Houtz and wife.

MARTIN SPECK, (Swatara.)
Speck—Anna, Maria, b. Jan. 15, 1741; bap. April 16, 1742. Sponsors, Sigmund Haehnle, jr., and Anna Maria Becker.
—— Maria Catarina, b. Aug. 28, 1748; bap. Sept. 4, 1748. Sponsors, Sigmund Haehnle and his wife.
—— Johannes, b. Sept. 18, 1754; bap. Oct. 7, 1754. Sponsors, Jacob Loresch and his wife.

FRIEDERICH HAEHNLE, (Swatara.)
Haehnle—Jacob Friederich, b. March 12, 1742; bap. April 16, 1742. Sponsors, Jacob Birckel and his wife.
—— John Michael, b. Oct. 12, 1743; bap. Oct. 23, 1743. Sponsors, George Frederich and his wife.
—— Anna Margaretha, b. Dec. 30, 1745; bap. March 12, 1746. Sponsors, Wendel Heyl and wife Anna.
—— Maria Eva, b. March 5, 1747; bap. March 29, 1747. Sponsors, Wendel Heyl and wife Anna.
—— Elizabetha, b. Dec. 18, 1748; bap. Dec. 25, 1748. Sponsors, Wendel Heyl and wife Anna.

FREDERICH HAEHNLE, (Swatara, continued.)
Haehnle—Eva Catarina, b.Jan.6,1751; bap. Jan. 21, 1751. Sponsors, Veit Kapf and wife Gertraudt.
—— Anna Barbara, b. Jan. 14, 1753; bap. Feb. 25, 1753. Sponsors, Wendel Heyl and wife Anna.

JOHN BROWN, (Swatara.)
Brown—Maria Regina, b. Feb. 26, 1742; bap. April 16, 1742. Sponsors, John Bindtnagle and wife.
—— Jacob, b. March 27, 1746; bap. April 27, 1746. Sponsors, John Bindtnagle and wife.
—— Anna Barbara, b. April 6, 1755; bap. June 15, 1755. Sponsors not given.

ANTONIUS ROSENBAUM, (Swatara.)
Rosenbaum—Susanna—b. May 3, 1739; bap. April 16, 1742. Sponsors, Martin Speck and is wife.
—— Salome, b. March, 1741; bap. April 16, 1742. Sponsors, Philip Dubs and his wife.

JOHN GEORGE SCHMIDT, (Lancaster.)
Schmidt—Christian, b. Feb. 10, 1742; bap. May 2, 1742. Sponsors, Christian Andereck and wife.

CHRISTIAN ANDERECK, (Lancaster.)
Andereck—Catarina, b. Feb. 23, 1742; bap. May 2, 1742. Sponsors, John George Schmidt and wife.

GEORGE QUICKEL, JR. (Pequea.)
Quickel—Anna Catarina, b. March 23, 1742; bap. May 2, 1742. Sponsor, Anna Catarina Quickel.

PETER APFEL, (Monocacy.)
Apfel—Eva Rosina, b. May 9, 1742; bap. May 20, 1742. Sponsor, Eva Rosina Kauth.

CHRISTIAN GEIGER, (Hempfield.)
Geiger—Maria Margaretha, b. May 29, 1742; bap. July 4, 1742. Sponsors, Martin Hofman and his wife.

JOHN DIETRICH GAENER, (Lancaster.)
Gaener—Eva Catarina, b. May 6, 1742; bap. July 4, 1742. Sponsors, John George Snyder and wife Anna Catarina.

CHRISTOPH MEYER, (Lebanon.)
Meyer—John George, b. Dec. 4, 1735, bap. Apr. 18, 1736. Sponsors, John George Klein and his wife Anna.
——Maria Barbara, b. Aug. 12, 1738, bap. May 21, 1738. Sponsors, John Peter Kucher and wife Maria Barbara.
——Anna Maria, b. June 16, 1742, bap. July 18, 1742. Sponsors, Thomas Koppenhoefer and wife Anna Maria.

MICHAEL LAUER, (Swatara.)
Lauer—John Michael, b. June 29, 1742, b. July 18, 1742. Sponsors, Michael Spengel and his wife.
——Catharine Barbara, b. March 11, 1744, bap. April 15, 1744. Sponsors, Valentine Kuefer and wife Anna Barbara.

JAMES McNEESS, (Lebanon.)
McNeess—James, b. Sept. 4, 1741, bap. July 18, 1742. Sponsors, Anastasius Uhler and his wife Dorothea.

JOHN JOAKLES, (Swatara.)
Joakles—Anna Sara, b. Feb., 1742, bap. July 18, 1742. Sponsors, John Deeby and his wife.

JOHN WENDEL HEYL, (Swatara.)
Heyl—John Jacob, b. June 13, 1742, bap. July 18, 1742. Sponsors, John Jacob Dubs and Barbara Kappler.

CASPAR SCHMIDT, (Conewago.)
Schmidt—Maria Elisabetha, b. Nov. 8, 1742, bap. Nov. 23, 1742. Sponsors, Daniel Schlaegel and Maria Elisabetha Morgenstern.

JOHN REYNOLDS, (Swatara.)
Reynolds—Bridgitte, b. Nov. 20, 1742, bap. Dec. 21, 1742. Sponsors, Francis Reynolds, Patrick and Sarah McKue.
——Elisabetha, b. March 23, 1744, bap. April 15, 1744. Spousors, Thomas and Elisabetha McKay, also Joseph Reynolds and Rebecca Reynolds.
——John, b. 1746, bap. 1746.
——Joseph, b. Nov. 10, 1747, bap. Nov. 24, 1747. Sponsors, Joseph Reynolds, Sarah McKue and Sarah Reynolds.

CHRISTOPH LABENGEIYER, (Swatara.)
Labengeiyer—Maria Catarina, b.May 18. 1730, bap. Sept. 29, 1730. Sponsor, Anna Maria Meyer.
——John Jacob, b. April 8, 1734, bap. April 21, 1734. Sponsors, John Jacob Beyer and his wife Margaretha.
——Anna Barbara, b. June 14, 1736, bap. July 18, 1736. Sponsors. Michael Ranek and his wife Anna Barbara.
——Christoph, with his second wife, b. in Oct., 1741, bap. April 15, 1742. Sponsors, Christoph Meyer and his wife.

JOHN BINDTNAGEL, (Swatara.)
Bindtnagel—Anna Sabina, b. Sept. 11, 1733, bap. Sept. 17, 1733. Sponsors, John Martin Meyle and his wife Anna Sabina.
——Johannes, b. Feb. 7, 1735, bap. March 23, 1735. Sponsor, Melchior Heuter.
——John Martin, b. Sept. 7, 1736, bap. Oct. 3, 1736. Sponsor, John Martin Meyle.

JOHN GEORGE ERGEBRECHT, (Lebanon.)
Ergebrecht—Catarina, b.March 26,1733; bap. Sept. 17, 1733. Sponsor, Anna Catarina Mast.
——Anna Elisabetha, b. Feb. 20, 1735, bap. April 27, 1735. Sponsors, Jacob Mast and his wife.

FREDERICH HEINRICH GEELWICHS, (Conewago.)
Geelwichs—Catarina, b. Dec. 21, 1735, bap. Feb. 1, 1736. Sponsors, Jacob Verdriess and Catarina Euler. C12
——Catarina, b. Dec. 11, 1737, bap. May 23, 1738. Sponsors, Elias Daniel and Anna Eva Kuntz. C13
——George Karl, b. Sept. 16, 1739, bap. Nov. 13, 1739. Sponsor, George Karl Bernitz. C14

MICHAEL BAUER, (Swatara.)
Bauer—John Valentin, b. Sept. 17, 1739, bap. Oct. 21, 1739. Sponsors, John Valentin Stober and his wife Eva.
——John Martin, b. Dec. 27, 1741, bap. Jan. 1, 1742. Sponsors. Valentin Kuefer and Anna Maria Frederich.
——Anna Eva, b. July 28, 1746, bap. Aug. 17, 1746. Sponsors, Michael Spiegel and wife Anna Eva.
——Anna Maria, with second wife, b. Jan. 12, 1749, bap. March 19, 1749. Sponsors, Sigmund Haehnle and his wife.

bap. Jan. 18, 1767. Sponsors, Johannes Diebin and Margar. Haehnlin.

JOHN NICOLAUS BIEL and wife Maria Elisab., (Bethel.)

Biel—John Freiderich, b. Feb. 8, 1767; bap. March 15, 1767. Sponsors, Martin Kuefer and wife Maria Elisabetha.

PETER ELSZER and wife Anna Margaretha, (Warwick.)

Elszer—Peter, b. Feb. 14, 1767; bap. March 23, 1767. Sponsors, George Michael Eichelberger and wife.

JOHN ROESZLE, (Krupp Church, of Lancaster.)

Roeszle—Susanna, b. June 13, 1767; bap. Aug. 2, 1767. Sponsors, George Eberle and wife Susanna.

JOHANNES HUBER and wife ELISAB., (Lebanon.)

Huber—John Jacob, b. July 27, 1767; bap. Aug. 2, 1767. Sponsors, Jacob Stieb and wife.

JACOB ZIEGLER, Jr., and wife JUDITH, (Lebanon.)

Ziegler—Philip Jacob, b. July, 1767; bap. Aug. 2, 1767. Sponsors, Philipp Brenner and wife.

MARTIN KUEMMERLING and wife ANNA MAGAR., (Bethel.)

Kuemmerling—Christoph Freiderich, b. Aug. 22; bap. Sept. 6, 1767. Sponsors, Christoph Frederich Weyman and wife Eva Maria.

GEORGE GLASS and wife EVA ELIZABETH.

Glass—Christian, b. Dec. 25, 1768; bap. Jan. 29, 1769. Sponsors, Jost Schwertzel and wife Susanna.

PETER KRAEMER and wife MARGARETHA, (Lebanon.)

Kraemer—John Adam, b. Feb. 19, 1767; bap. March 22, 1767. Sponsors, John Adam Waible and wife Anna.

CHRISTOPH ZIEBOLD and wife BARBARA, (Lebanon.)

Ziebold—Catarina, b. July 19, 1769; bap. July 24, 1769. Sponsors, Conradt Braun, Sr., and wife Agnes.

——— Anna Maria, b. July 19, 1769; bap. July 24, 1769. Sponsors, Michael Rieder and wife Anna Maria.

ANDREAS VOGEL and wife ANNA MARIA, (Hanover.)

Vogel—Andreas, b. (posthumous.), Jan. 1770; bap. Jan. 14, 1770. Sponsors, John Martin Lang and Hannah Zimmerman.

FRANCIS GUARD and REBECCA MARTIN.

Guard—Joseph, b. Feb. 4, 1770; bap. Feb. 5, 1771. Sponsors, John Martin and his wife Sarah.

LORENTZ STRICKER and wife, BARBARA, (Hanover.)

Stricker—Johannes Wilhelm, b. Feb. 26, 1771; bap. April 1, 1771. Sponsors, Jacob Wolf and wife Elisabetha.

PHILIPP JACOB GEISS and wife APPOLLONIA.

Geiss—Catarina, b. Sept. 17, 1753; bap. Sept., 1753. Sponsors, George Adam Geiss and Catarina Muench.

HEINRICH MEYER.

Meyer—John George, b. March, 1775; bap. May 14, 1775. Sponsors, John Roessle and wife.

JOHN NICOLAUS BOPP and wife CATAR. MARGAR, (Swatara.)

Bopp—Catarina, b. Jan. 28, 1776; bap. Feb. 11, 1776. Sponsors, Peter Felt and wife Catarina.

CHRISTIAN STUCKY and wife ANNA MARIA, (Hanover.)

Stucky—Anna Maria, b. Jan., 1776; bap. May 5, 1776. Sponsors, Wilhelm Hedderich and wife Margaretha ———.

JOHANNES GASSERT and wife ANNA MARIA, (Bethel.)

Gassert—Johannes, b. June 28, 1776; bap. Aug. 25, 1776. Sponsors, Martin Kuefer and wife Elisabetha.

JACOB NEFF and his wife, (Williamsborough.)

Neff—John Heinrich, b. Feb. 20, 1778; bap. April 5, 1778. Sponsors, Carl Schedt and wife Eva.

GEORGE WALMER and wife, (Hanover.)

Walmer—Johannes, b. June 15, 1778; bap. Oct. 17, 1778. Sponsors, Johannes Walmer and wife Christina.

MATTHEIS BRAUNWELL and wife, (Kruppen Land.)

Braunwell—John Heinrich, b. Oct. 11, 1778; bap. Dec. 6, 1778. Sponsors, Martin Weitz and wife.

———

(These entries were made after the death of John Casper Stoever in 1779.)

FREDERICK STOEVER.

Johann Frederick Stoever and wife Margaretha nee Daenscherlz.

Stoever—Maria Catarina b. Jan. 9, 1781; bap. Jan. 18, 1781. Sponsors, Catarina Stoever, widow.

——— Maria Catarina, b. 1782; bap. Oct. 9, 1782. Sponsor, Catarina Stoever, widow.

——— John Fredericn, b. April 15, 1785; bap. May, 1785. Sponsors, Samuel Mery and wife Catarina.

——— John Jacob, b. June 10, 1787; bap. July, 1787. Sponsors, John Caspar Stoever and wife Barbara.

——— Johannes, b. Nov. 29, 1789; bap. July. Sponsors, John Stoever and his wife.

——— William, b. Aug. 21, 1792; bap. Nov. 28, 1792. Sponsors, Johannes Stoever (son of Adam) and Catarina Franck, both single.

———John Philipp, b. April 8, 1795; bap. April, 1795. Sponsors, John Philipp Fernsler.

——— Cattarina, b. Oct. 13, 1798; bap. Nov. 4, 1798. Sponsors, Johann Gloninger and wife Catarina.

MARRIAGES.

Record of persons united in Matrimony by me. John Casper Stoever, Evangelical Lutheran Minister in Pennsylvania, Anno 1730:

1730.

March 18. Daniel Rausch and Elisabetha Optograef, Providence.

April 27. Andreas Sebastian and Albertina Krauss, Hanover.

May 30. Wilhelm Tscheill and Regina Leiter, Leacock.

May 31. Heinrich Bayer and Elisabertha Maria Zerwe, Tulpehocken.

October 6. Peter Schell and Maria Catarina Walborn, Tulpehocken.

Oct. 20. Johann Caspar Bergheimer and Elisabetha Catar. Kaeufer (or Kraeuser?), Providence.

Oct. 21. John Heinrich Krebs and Maria Barbara Krim. Hanover.

Oct. 27. John Kitzmueller, sr., and Margaretha Mack, Earl Town.

Oct. 28. Leonhardt Grau and Susanna Simons, Cocalico.

Nov. 9. John George Schumacher and Catarina Drechsler, Macungie.

1731.

Feb. 9. Jno. Jacob Mueller and Anna Maria Apollonia Hartman, Providence.

Feb. 18. John Jacob Schwartz and Anna Catarina Rul, Maxatawny.

Feb. 25. Francis Reynolds and Catarina Steitz, Quittapahila.

April 18. Robert Shmidt and Sarah Grand, Oley.

April 26. John Philipp Firnszler and Maria Barbara George, Lancaster.

May 5. John Urban Lang and Catarina Blum, Tulpehocken.

Jne 5. John Kitzmueller, jr., and Philippina Christian Mack, Earl Town.

Sept. 23. Charles Fulk and Catarina Harry, Manatawney.

Oct. 19. Roger Evans and Margaretha German, Nantmeal.

Dec. 21. John Morgan and Anne Flannery, Colebrook Dale.

1732.

Jan. 25. John Shmidt and Margaretha Pickets, Manatawny.

Feb. 19. William Evans and Catharine Weaker, Oley.

Feb. 20. Water Field and Anna Tomson, Colebrook Dale.

April 25. John Jacob Kitzmiller and Anna Maria Somner, Earl Town.

May 2. Peter Jacob Fehler and Maria Otilia Weiler, Oley.

1733.

April 10. Friederich Heinrich Geelbwicks and Maria Dorothea Euler, Providence.

June 12. John Martin Koeblinger and Catarina Schneider, Hanover.

June 18. Matheis Ochs and Anna Maria Steitz, Hanover.

June 19. John Adam Romich and Maria Ursala Kraemerin, Skippach.

June 22. Carl Valentin Michael Schuetz and Juliana Lips, Chestnut Hill.

July 1. Andreas Beyer and Susanna Catarina Berghmer, Providence.

August 25. John Bartolomeus Hornberger and Anna Elisabetha Reiffen, Chestnut Hill.

August 28. John Michael Fischer and Anna Margaretha Kemp, Schuylkill.

Sept. 27. John Jung and Elisabetha Catarina Rul, Moselem.

Oct. 15. Hieronymus Glantz and Erna Barbara Mack, Philadelphia.

Oct. 28. John Adam Schuler and Anna Elisabetha Kling, Chestnut Hill.

Nov. 9. Andreas Stautzenberger and Johanna Francis, Lampert.

Nov. 20. John George Kuntz and Catarina Ochs, Hanover.

Nov. 28. Mattheis Naesz and Maria Barbara Hoerdter, Skippach.
Dec. 11. Sebastian Zimmerman and Anna Elisabetha Levandt, Maxataney.
Dec. 18. Johannes Kepner and Elisabetha Kaerchner, Chestnut Hill.
Dec. 18. Johannes Boehm and Anna Maria Burger, Providence.
Dec. 25. Johann Michael Probst and Anna Maria Keller, Cocalico.
Dec. 26. John Leonhardt Immel and Maria Burckert, Lancaster.
Dec. 30. John Adam Stoll ad Margaretha Saber, Earl Town.

1734.

Jan. 6. Balthasar Schneider and Anna Catarina Schmidt, Chestnut Hill.
Jan. 7. Geo. Peter Bisswanger and Jnstina Elis. Riess, Geramntown.
Jan. 8. John George Kohl and Barbara Beer, Skippach.
Jan. 29. Tobias Moser and Ursula Margar. Meyer, Hanover.
Feb. 11. Johannes Huber and Elisabetha Hoerdter, Oley Mountain.
March 8. Michael Nold and Maria Barbara Pfleuger, Maselein.
March 11. Johann Frederich Hartman and Mar. Lindemann, Philadelphia.
March 25. John Jacob Kuhn and Lucia Roht, New Goschenhoppen.
April 15. Jacob Gerber and Agnes Baseler, Philadelphia.
April 28. Nicolaus Brintzler and Anna Margaretha Ort, Lancaster.
April 28. Ottmar Schnaebele and Anna Margaretha Baetlin, Lancaster.
May 21. Christoph Amborn and Susanna Klauer, Coventry.
June 6. John Michael Mooser and Ursula Dumb, New Goschenhoppen.
June 25. Jacob Heller and Anna Barbara Pfautz, Leacock.
July 22. Antonius Kneussel and Anna Barbara Doerr, Lancaster.
August 13. Johann Adam Tiffenbach and Maria Sybilla Koebel, Tulpehocken.
Sept. 3. Adolf Mohr and Margaretha Schuetz, Leacock.
Oct. 1. John Jacob Weynandt ad Anna Stephan, Leacock.
Oct. 21. Jacob Mueller and Margaretha Walther, Frankford, at Delaware River.
Oct. 27. Philipp Rudiesile and Susanna Beyer, Conestoga.
Nov. 12. Philipp Diebo and Magdalena Biber, Coventry.
Nov. 14. John Adam Schillich and Rosina Widder, Cocalico.
Dec. 3. Nicolaus Coerper and Margaretha Marstaller, Skippach.
Dec. 18. Christoph Meyer and Anna Rosina Kopfenhoefer, Lebanon.
Dec. 29. Jacob Wuertz and Anna Barbara Hoof, Coventry.

1735.

Jan 7. John George Petry and Sabina Roth Cumru.
Jan. 10. David Bier and Elisabetha Trabern, Coventry.
March 9. John Philipp Hoffman and Maria Anna Dieter, Tulpehocken.
April 1. Martin Frey and Maria Magdalena Willheut, Codorus.
April 22. Paulus Bung and Maria Barbara Catermaenn, Cocalico.
April 29. John Mattheis Wagner and Elisabetha Stuep, Tulpehocken.
May 4. George Adam Heyl and Anna Elisabetha Madinger, Lancaster.
May 25. George Adam Stiess and Susanna Fechter, Lancaster.
June 2. Michael Will and Christina Puder, Leacock.
June 17. Johannes Mueller and Anna Martin Spatz, Cocalico.
June 17. John Casper Dorst and Anna Elisabetha Ferrar, Cocalico.
July 1. John George Heyl and Margaretha Dill, Leacock.
August 10. John George Bohrman and Catharina Motz, Warwick.
August 15. Nicolaus Koger and Maria Elisabetha Willheut, Codorus.
August 16. Two English couples at Susquehanna River, in Creesop's house.
Oct. 6. John Peter Kncher and Anna Bar. Koephenhoefer Lebanon.
Oct. 14. John Wilhelm Albert and Maria Eva Allgeyer, Leacock.
Oct. 16. Valentin Schultz and Maria Eva Stocker, Conestoga.
Oct. 17. Friederich Linnenburger and Anna Catarin Hildebrandt, Conestoga.
Nov. 2. John George Hauck and Anna Maria Zint, Conestoga.
Nov. 18. Peter Becker and Susanna Holtzbaum, Conestoga.
Nov. 25. Michael Raup and Anna Maria Meihel, Earl Town.
Nov. 30. Martin Schoeffle and Elisabetha Sieber, Conestoga.
Dec. 26. Laurentz Weber and Anna Maria Kirchhoefer, Leacock.
Dec. 30. John Caspar Schaffuer and Anna Maria Knobel, Lancaster.
Dec. 30. Christian Andereck and Anna Catarina Jung, Lancaster.

1736.

Jan. 12. John Geo. Riegel and Anna Maria Plattner, Tulpehocken.
Jan. 13. Valentin Schneider and Anna Kiebing, Cocalico.

Jan. 20. Michael Kopf and Maria Margaretha Frey, Moden Creek.
Jan. 20. George Hoegie and Anna Eva Frey, Moden Creek.
Feb. 10. Jacob Schreyak and Barbara Wolff, Hempfield.
March 9. Jacob Verdriess and Catarina Euler, Warwick.
March 21. George Michael Koch and Anna Catarina Ergebrecht, Warwick.
March 29. Solomon Kremlich and Anna Christina Lapp, Perkiomen.
May 3. Two English couples at Opecken, in the presence of Lord Fairfax, in the county of Orange and in the colony of Virginia.
May 25. Heinrich Klein and Anna Maria Bettlin, Warwick.
May 30. Nicolaus Mueller and Catarina Lechner, Warwick.
June 12. Valentin Groh and Elisabetha Schaeffer, Helm Town.
June 14. Wilhelm Ellbrodt and Anna Beschel, Warwick.
June 14. Heinrich Bischoff and Elisabetha Ellrodt, Warwick.
June 22. Jacob Heyl and Catarina Riehl, Lancaster.
Aug. 29. Johannes Schreyack and Susanna Kirn, Lancaster.
Aug. 31. John Carl Hornberger and Ana Eva Saur. Leacock.
Nov. 9. John Leonhardt Billmeyer and Anna Bart, Leacock.
Dec. 14. Heinrich Geiger and Anna Barbara Becher, Earl Town.

1737.

Feb. 1. Thomas Willson and Anna Catharina Henckel, Lancaster.
Feb. 1. Joseph Mayhuw and Elisabetha Swinehardt, Lancaster.
Feb. 3. Johannes Sawer and Anna Currey, Leacock.
Feb. 7. John Peter Wissenandt and Maria Magdalena Suni, Cocalico.
Feb. 13. Jacob Spannseiler and Elis. Magdalena Schmidt, Lancaster.
Feb. 22. George Stephan Baumann and Maria Catar. Ergebrecht, Warwick.
April 19. Martin Koeller and Magdalena Leitner, Leacock.
April 25. Philipp Knopff and Maria Elisabetha Hoffman, Earl Town.
May 3. Anastasius Uhler and Dorothea Iergr, Lancaster.
May 10. Michael Bintz and Anna Elisabetha Huber, Earl Town.
June 8. John Hodge and Elisabeth Windseeth, Jacob Thigh and Mary White, Daniel Hoolman and Elizabeth Cartlay, North River, Shenandoah, vulgo, Cockel Town in Orange county, in the Colony of Virginia.
June 20. Christian Loeffel and Maria Barbara Wittner, Catores.
June 21. Johannes Cledy and Esther Tusser, Beaver Creek.
June 21. Andreas Grass and Barbara Cledy, Beaver Creek.
July 3. John George Schmidt and Catarina Jung, Lancaster.
Aug. 15. Patrick Block and Mary Black, Lancaster.
Sept. 7. Valentin Mueller and Elizabetha Dorothea Lochmann, Earl Town.
Sept. 13. Johannes Uhrich and Margaretha Brenneis, Cocalio.
Sept. 14. Christoph Neumeister and Anna Louis, Earl Town.
Oct. 10. Leonhard Hof and Elizabehta Stout, Swatara.
Oct. 23. John Jacob Frank and Anna Catarina Boller, Lancaster.
Oct. 24. Michael Wittmer and Veronica Huber, Hampfield.
Nov. 21. Philipp Ziegeler and Margaretha Schmidt, Cadorus.
Nov. 21. George Meyer and Christina Ziegeler, Codorus.
Dec. 4. William Lightel and Nolly Owens, Lancaster.
Dec. 15. Antonius Rosenbaum and Barbara Baumaenn, Earl Town.
Dec. 20. Jonas Donner and Anna Schreyack, Cocalico.

1738.

Jan. 9. Johannes Riegel and Catarina Elizabetha Schirmann, Tulpehocken.
Jan. 15. Jacob Forsett and Eva Margaretha Weyer, Tulpehocken.
Jan. 15. Michael Becker and Anna Margaretha Diel, Lancaster.
Jan. 17. John George Ziegeler and Margaretha Hamspacher, Codorus.
Jan. 23. Edward Thurnbury and Elizabeth Burney, Warwick.
Jan. 23. [illegible]chard Rampton and Elizabetha Grandy, Warwick.
Jan. 24. Adam Vollmar and Anna Margaretha Eichelberger, Conestoga.
Feb. 6. John Welsh and Elizabeth Whitside, Quittapahilla.
Feb. 7. Johannes George Glasshrenner and Elizabetha Fischer, Tulpehocken.
Feb. 8. Johannes George Laub and Anna Winger, Tulpehocken.
Feb. 8. Johannes Kittner and Barbara Heinrich, Tulpehocken.
Feb 12. John George Loewenstein and Catarina Ruscher, Lancaster.
Feb. 14. Erasmus Holtzapfel and Christina Ruscher, Earl Town.
Feb. 21. Johannes Volckman and Elizabeth Ferrir, Leacock.
March 21. Johannes Jacob Dambach and Maria Elizabetha Seyboldt, Lancaster.

6/14/2013
F 2944705 10 00
HF GROUP - IN